Directory

Stinger 8500 Stacker

Parts Manual
2019 & 2020
S/N A1013-A1045

With MTU Engine

Unit Index
Shourcuts

Chassis Index
Shourcuts

Control Valves

Filters

Stacker Unit Assemblies

Belts

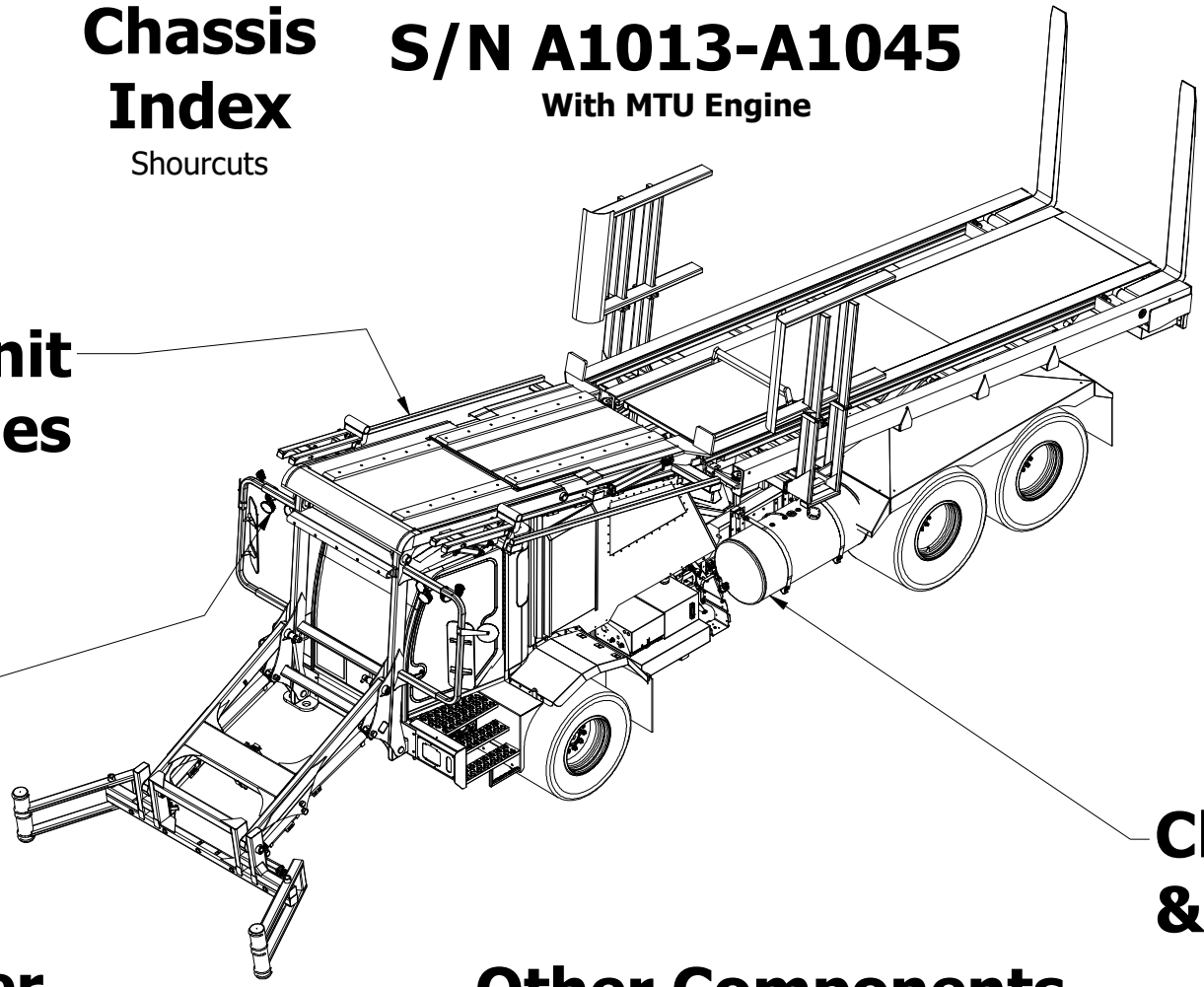

Lights

Fluids

Chassis, Cab & Fenders

Stinger Operator's Manual

Other Components Parts & Service Manuals

8500 Stacker
Unit Index

Back

Home

Control Valves

Poly Squeeze Parts

Hydraulic Cylinders

Frontend

A/C Parts

Stackframe

Top Deck

Chain Components

Subframes & Doors

8500 Stacker
Chassis Index

Back

Home

Fenders

Engine

Chassis

Mudflaps

A/C Parts

Spring Hangers

Cab

Transmission

Wheels & Tires

Component Manuals

These files will open in a new window

Back

Home

Operator's Manuals	Parts Manuals	Service Manuals
Allison	MTU	Allison
MTU	Hendrickson (Rear Suspension)	Hendrickson (Rear Suspension)
	Cleanfix	Sheppard (Steering Gear Box)

Dana/Spicer Service Manuals

Slack Adjuster	Front Axle (Parts)	Rear Axle (Parts)
Brake Shoes	Wheel Ends	Rear Axle (Service)

Control Valves Locations

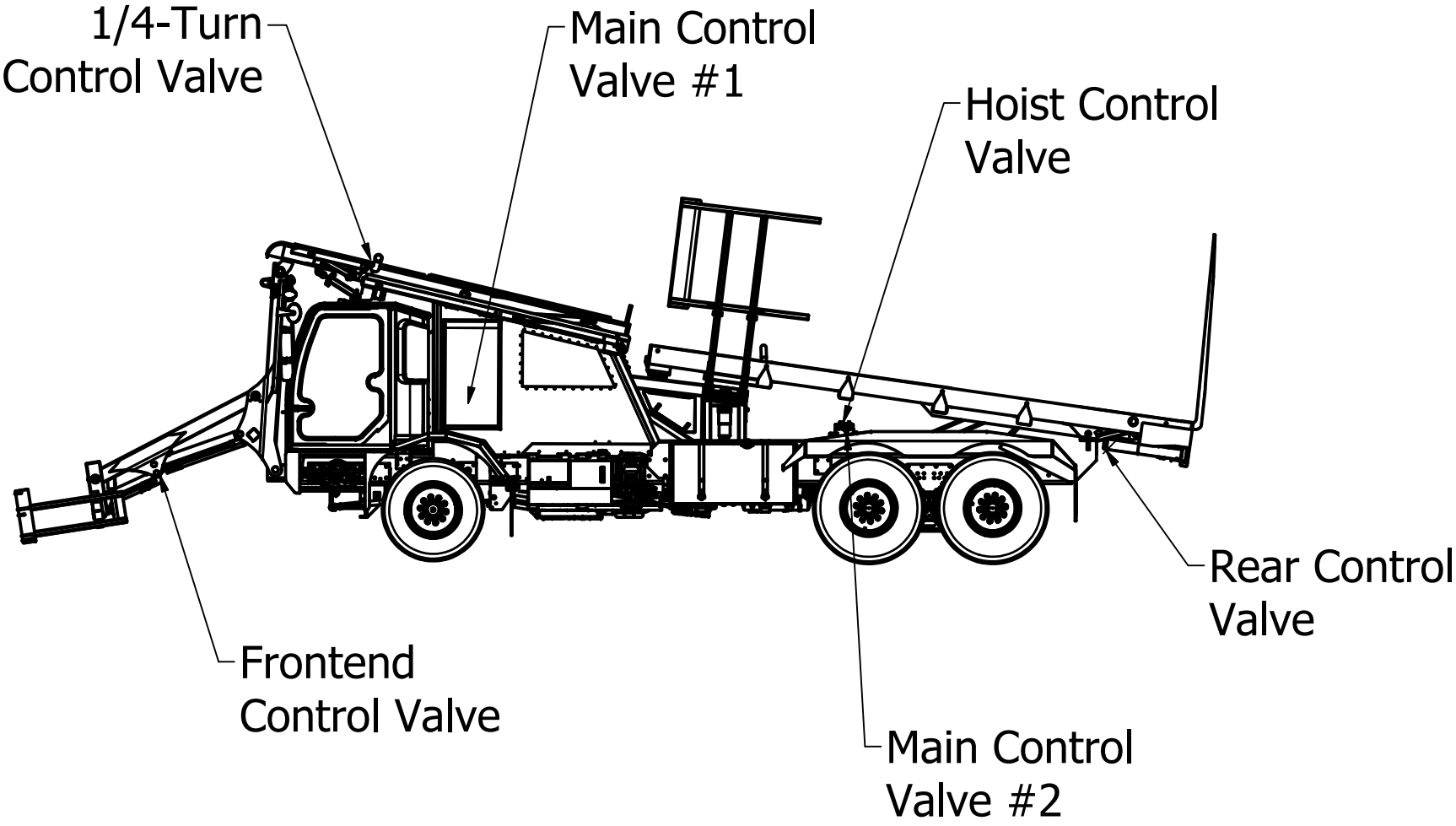

Light Index

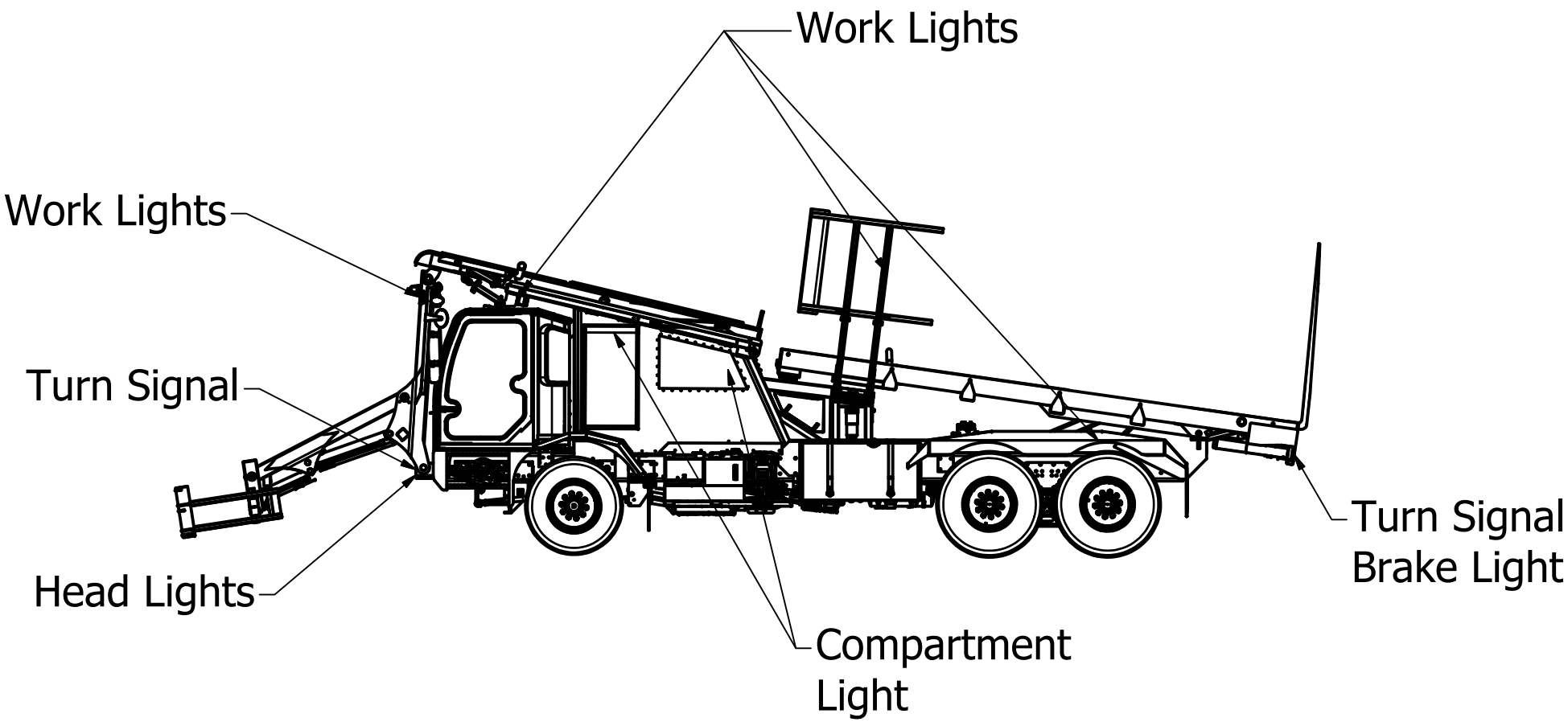
Work Lights
Work Lights
Turn Signal
Head Lights
Compartment Light
Turn Signal Brake Light

Hydraulic Cylinder Index

Back

Home

Front Cylinders

Rear Cylinders

Stinger 8500 Stacker

Fluids Index

Back

Home

Power Steering

Engine Oil

Hydraulic Oil

Rear Differential

Transmission Oil

Engine Coolant

Power Steering Fluids

Back

Filter part #1490-5469

(Nelson #83804E....Donaldson #P550637)
Change filter after 250 hrs and every 1000 hrs thereafter

Home

10 qts fills the system

Approved Hydraulic Fluids

Automatic Transmission Fluid Dexron II
Automatic Transmission Fluid Type "E" or "F"
Chevron 10W-40
Chevron Custom 10W-40 Motor Oil
Chevron Torque 5 Fluid
Exxon Nuto H32 Hydraulic Fluid
Fleetrite PSF (Can #990625C2)
Ford Spec. M2C138CJ
Mack EO-K2 Engine Oil
Mobil ATF 210
Mobil Super 10W-40 Motor Oil
Premium Blue 2000 - SAE 15W-40
*Shell Rotella T30W
*Shell Rotella T SAE 30
Texaco 10W-40
Texaco TL-1833 Power Steering Fluid
Union 10W-40
Union 15W-40
Unocal Guardol 15W-40 Motor Oil

The steering system should be kept filled with one of the above fluids. Fluids marked with an asterisk (*) have not been approved for use with TRW's pump.

⚠ WARNING **Completely flush the steering system with one of the recommended fluids above only. Do not mix oil types. Any mixture or any unapproved oil could lead to seal deterioration and leaks. A leak could ultimately cause the loss of fluid, which could result in a loss of power steering assist.**

Rear Differential Oil

Back

Home

The Rear differential uses 85/140 gear lube

It takes 39 pints to fill the system

Change oil after the first 250 hrs

and every 12 months thereafter

Hydraulic Oil

Back

Home

Filter #1490-5214

(Donaldson #P16-5878)

Hydraulic oil should have an ISO AW-46 rating

(Approx. 130 gallons fills the system)

John Deer Hy-Guard & CIH Hy-Trans work fine

Change filters every 12 months

Transmission Oil

Back

Home

Filter #1490-4598

(Allison #29548988.....Donaldson #P560971)

Transmission Oil should be Allison approved

(T.E.S. 295)

Initial fill 32 qts, Refill 22 qts

Change the filter at 200 hrs then
Change Oil/Filter every 3000 hrs for synthetic Oils

Partial List of
T.E.S. 295 Oils

Engine Oil
MTU 1300

Back Home

Oil Filter

(SN:A1013-A1015) MTU 4701800309.....1490-7346
(SN:A1016-A1035) MTU 4731800009.....Baldwin P7505.....1490-7391
(SN:A1036-A1045) MTU 4731800509.....1490-7692

Oil Change 40 qts

SAE-C4 15/40 (Mobile Delvac)

Change oil/filter every 500 hrs

8500 Filters

MTU 1300

Engine Oil Filter
(SN:A1013-A1015) Bosch: 4701800309.....1490-7346
(SN:A1016-A1035) Bosch: F 026 407 192.....MANN: HU 12 001 z.....1490-7391
(SN:A1036-A1045) Bell: B45E.....MTU: A4731800509.....1490-7692

Fuel Filters
(SN:A1013-A1015) MTU: 4700907552.....1490-7390
(SN:A1016-A1045) MTU: 4710902455.....Mahle: KX 400D.....1490-7392

Def Filter.....MANN: A000 142 1089.....1490-7445

Engine Air Filters
Primary (Outer).....Enginaire 68541-1.....1490-7359
Secondary (Inner).....Enginaire 68541-2.....1490-7360

Transmission Filter.....Allison 29548988.....Donaldson P560971.....1490-4598

Hydraulic Oil Filter.....Donaldson P165878.....1490-5214

High Pressure Fan Filter.....MTU 0095D010ON.....1490-7672

Cab Air Filters
Fresh Air (Paper).....WIX 49979.....1490-6528
Recirculated Air (Foil).....Red Dot 78R5361.....1490-6529

MTU 1300 Belt Routing

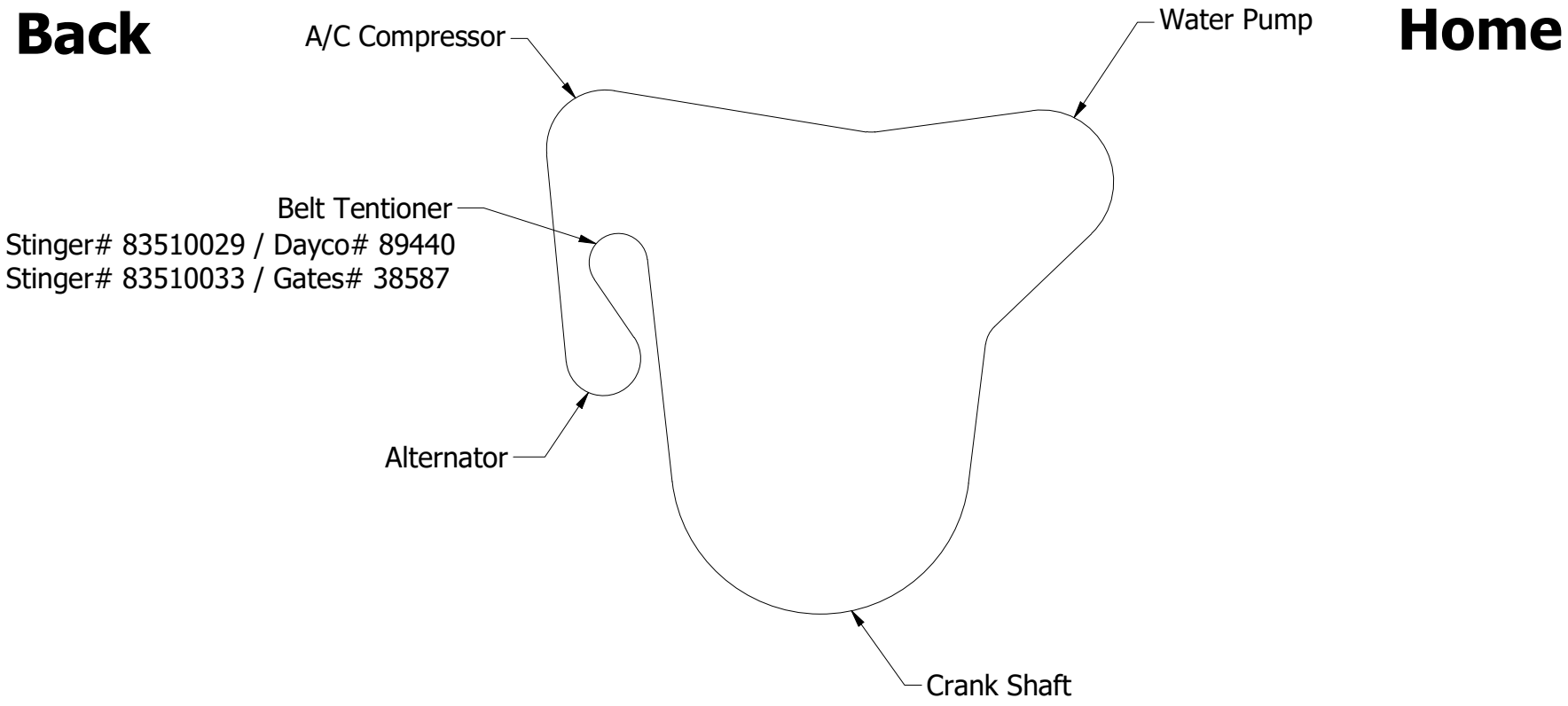

Serpentine Belt

SN: A1013-A1015.....DAYCO: 8PK2555HD....Gates: 8PK2553HD....1490-7388
SN: A1016-A1045.....Gates: 8PK2643HD.....1490-7389

T. E. S. 295 Approved
Transmission Oils

Back

Home

Marketer	Brandname
Castrol	Transynd
BP Lube	Autran Syn 295
Cognis	Emgard 2805
International	Fleetrite Synthetic ATF
ExxonMobile	Delvac Sybthetic ATF
John Deere	HD SynTran
Volvo	Bulldog Synthetic ATF

Belts & Filters

MTU 1300

Filters

Engine Oil Filter.....**1490-7346** (MTU #4701800309) .....Unit# A1013-A1015
1490-7391 (MTU #4731800009...Baldwin P7505) Unit# A1016-A1035
1490-7692 (MTU #4731800509) ..... Unit# A1036-A1045
Fuel Filters: .....**1490-7390** (MTU #4700907552).....Unit# A1013-A1015
1490-7392 (MTU #4700902455)..... Unit# A1016-A1045
Transmission Filter.....**1490-4598** (Allison #29548988...Donaldson #P560971)
Engine Air Filter: Primary (Outer).....**1490-7359** (Enginaire #68541-1)
Secondary (Inner) .....**1490-7360** (Enginaire #68541-2)
Hydraulic Oil Filter.....**1490-5214** (Donaldson #P165878)
A/C Filters
Fresh air Filter (Paper).....**1490-6528** (Wix #49979)
Recirculate Filter (Foil).....**1490-6529** (Red Dot #78R5361)

Belts

Fan Belt (Serpentine).....**1490-7388** (MTU # 4709934096)..... Unit # A1013-A1015
1490-7389 (MTU # 4719935796...Gates # K081040HD) Unit # A1016-A1045

More Information **Fluid Index**

Rear Cylinder
Index

Back

Home

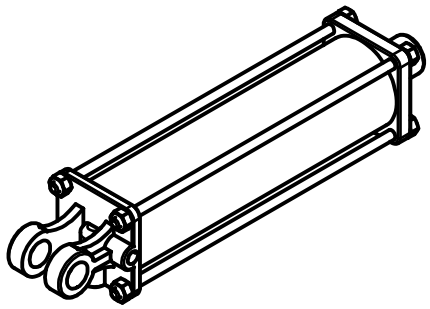

Hoist

Pull-Bar

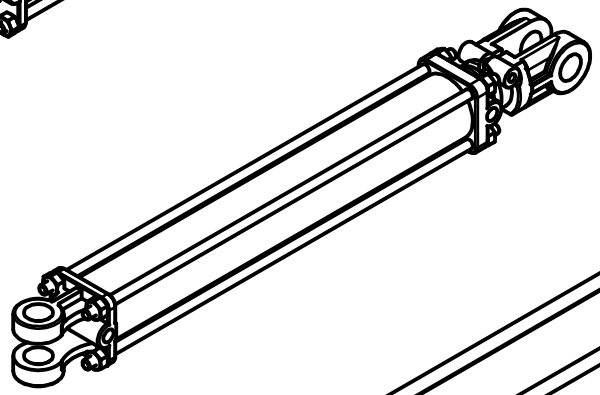

Stackdown

Squeeze

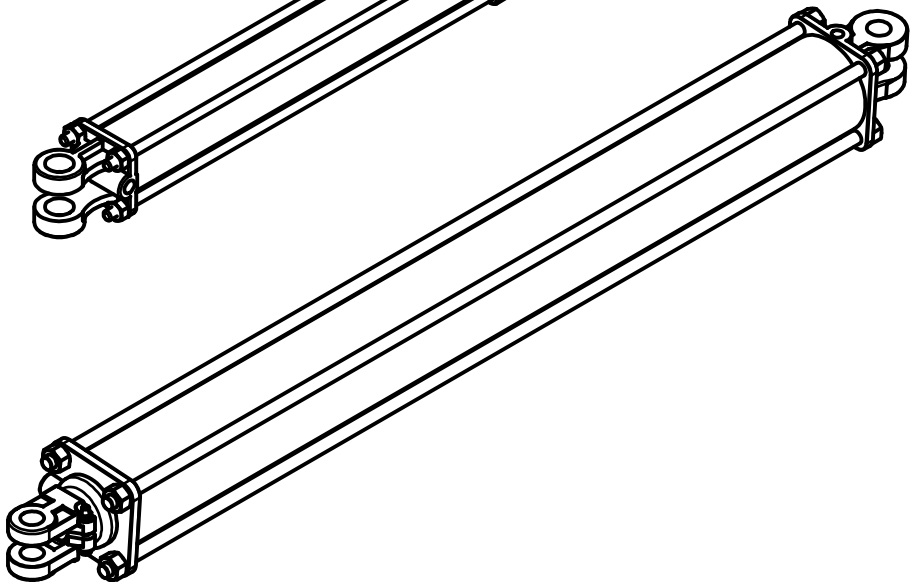

Push-Off

Front Cylinder Index

Back

Home

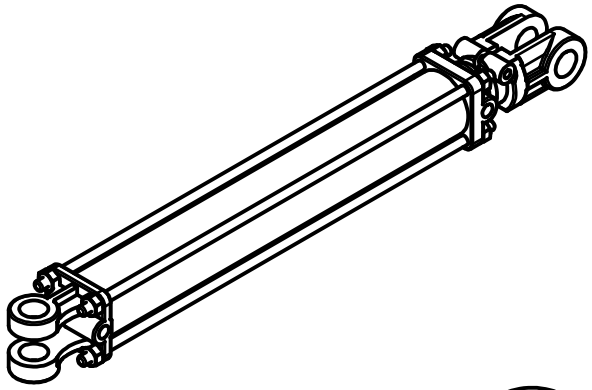

Front Sqz

Slide Assist

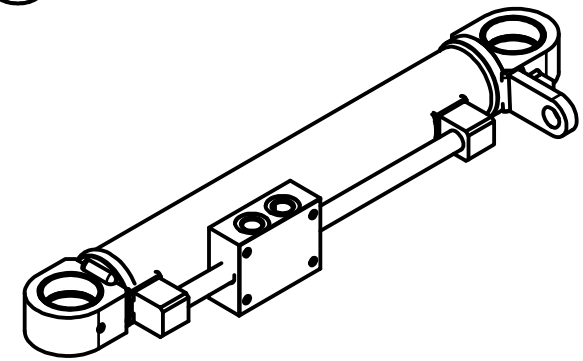

Front Tilt W/Sensor

Front Lift W/Sensor

Front Tilt

Front Lift

Double Turn

8500 Stacker Chassis

With MTU Engine

Back

Home

Cab

Fenders

Step & Toolbox

Chassis

Engine/ Transmission

Mudflaps

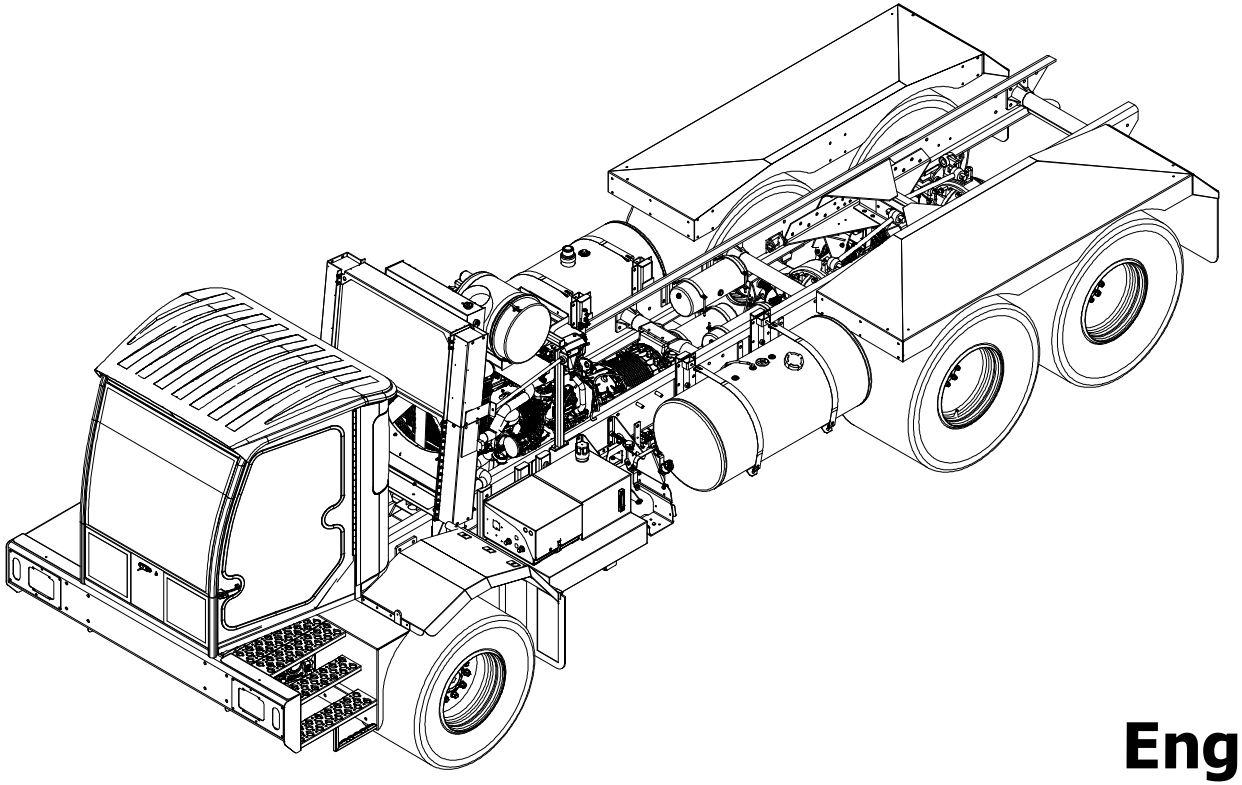

8500 Fenders

Back

Home

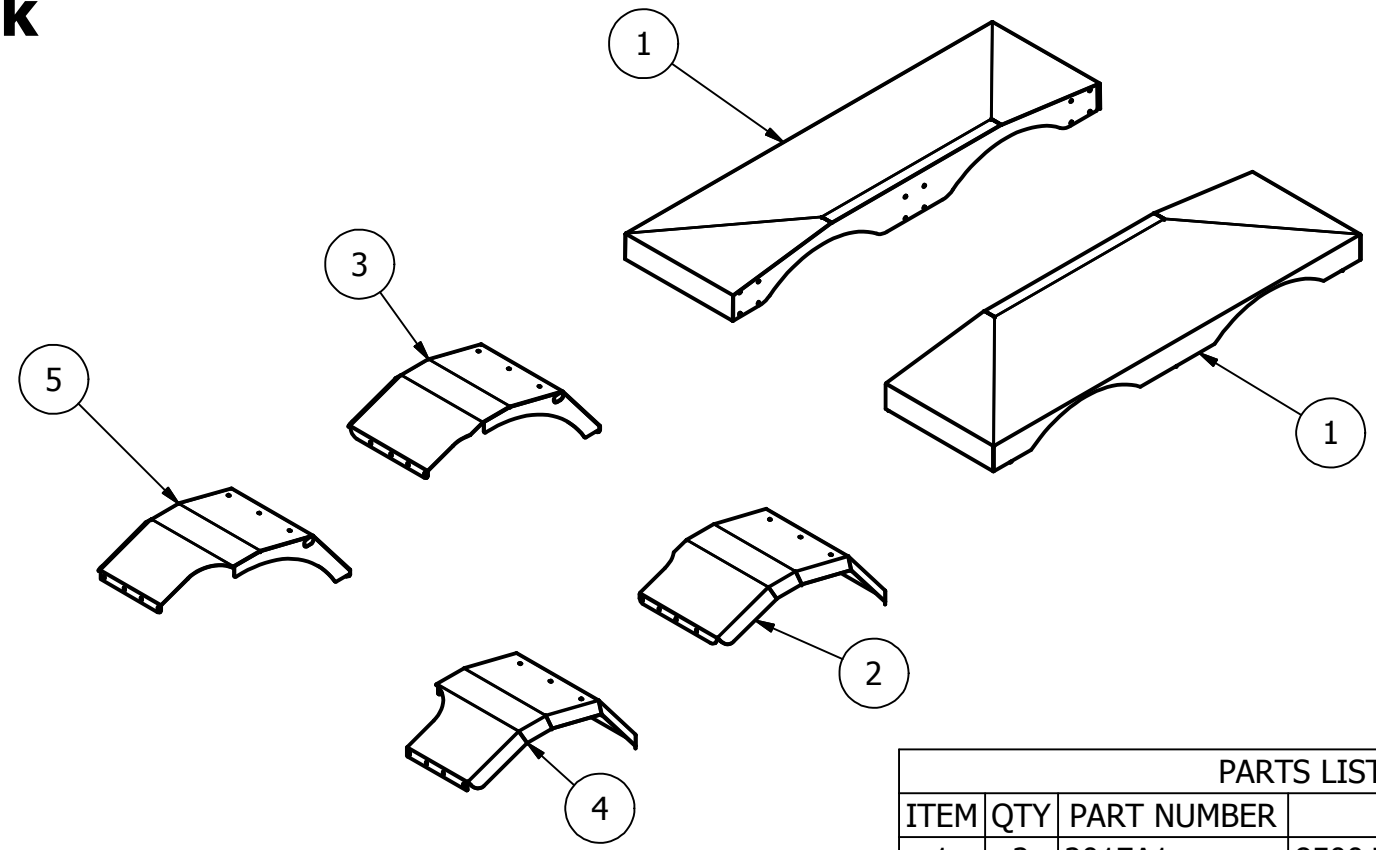

Mud Flaps

PARTS LIST			
ITEM	QTY	PART NUMBER	DESCRIPTION
1	2	2017A1	8500 Tandem Series Fender
2	1	2017A5	Front LH SS Fender (Floats)
3	1	2017A6	Front RH SS Fender (Floats)
4	1	2017A3	Front LH SS Fender (Std)
5	1	2017A4	Front RH SS Fender (Std)

Mud Flap Detail

Back

PARTS LIST			
ITEM	QTY	PART NUMBER	DESCRIPTION
1	2	2006A2	Front Mudflap Ext. Weldment (Std)
2	2	2006A4	Front Mudflap Ext. Weldment (Floats)
3	2	Cotter Pin	1/8 X 1-3/8 Cotter Pin
4	2	1490-5088	Mudflap Arm
5	2	1490-4514	24 X 24 Mudflap W/Stinger Bee
6	2	2017A2	8500 SS Rear Fender Mudflap Bracket
7	2	1490-2310	24 X 30 Mudflap W/Stinger Bee

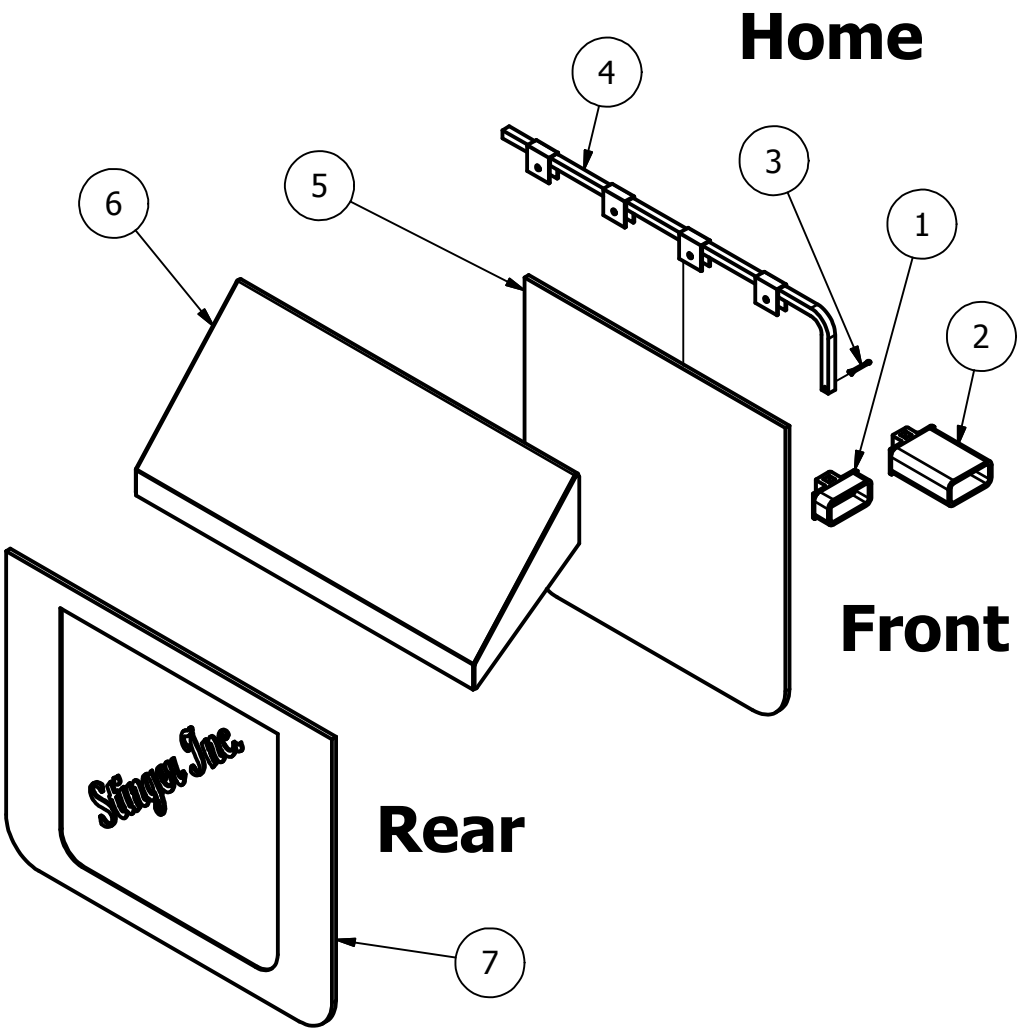

Stinger Built
8500 Chassis

MTU 1300

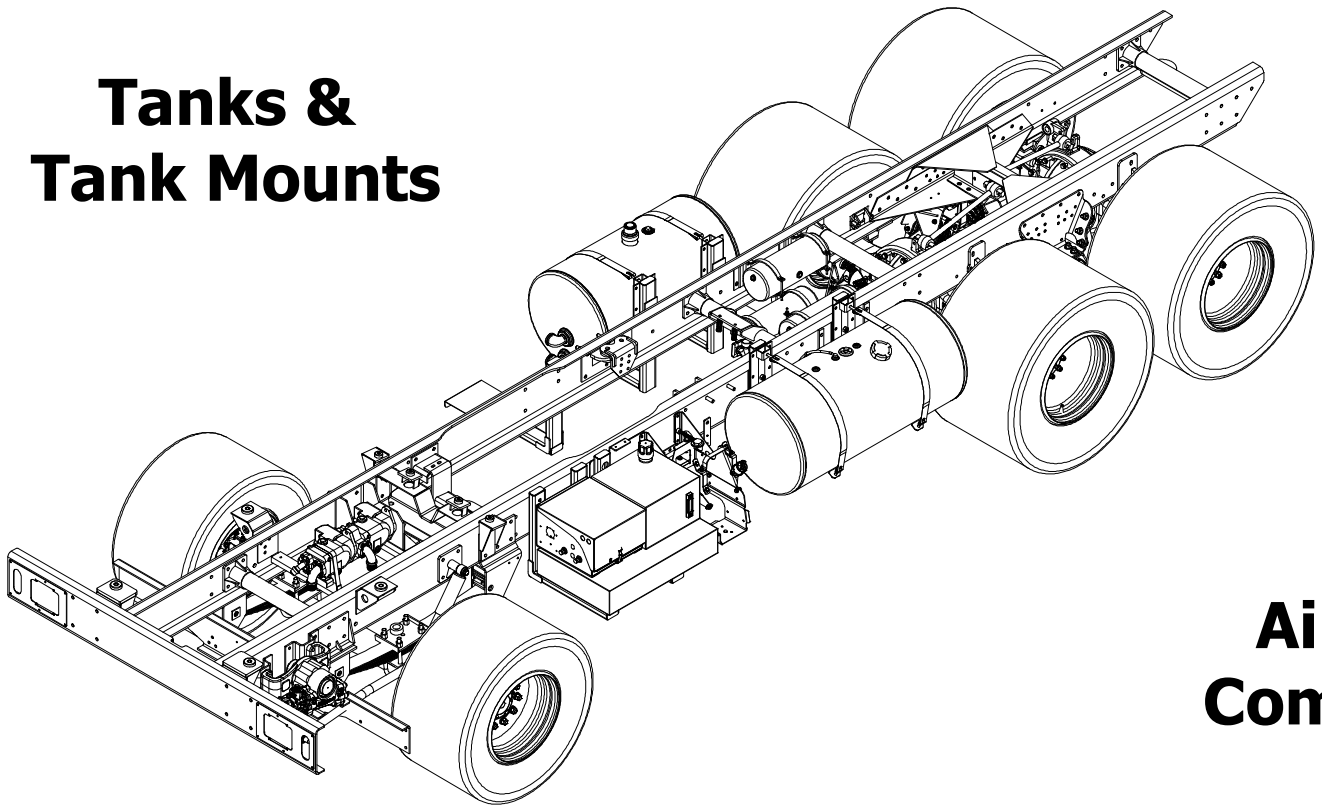

Stinger 8500 Stacker

Back

Home

New Able Cab Elements

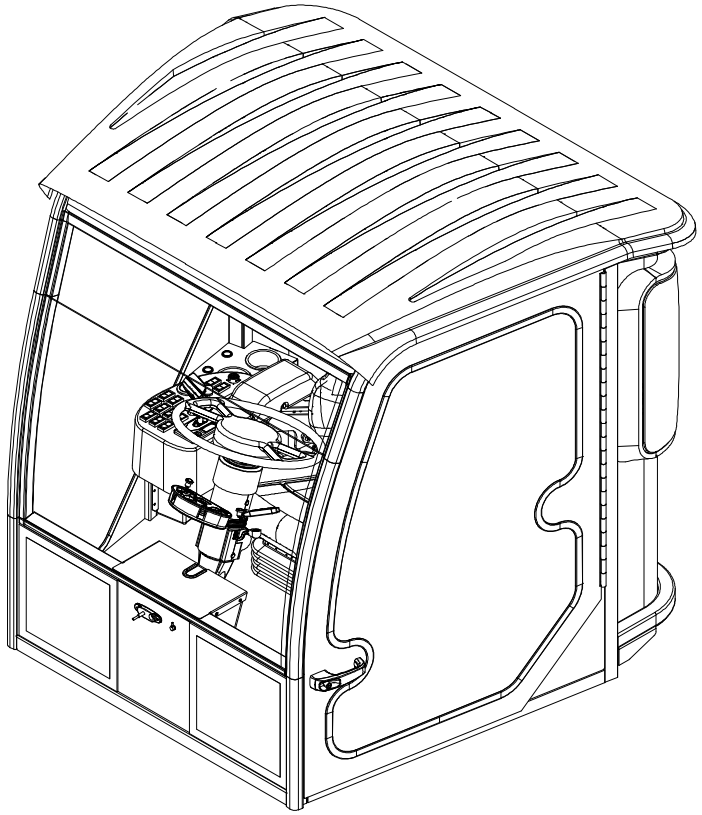

Joystick

Heating & A/C

Trans
Shifter

Glass
Gen 3

Glass
Gen4

Seat

Monitor

More

Stinger 8500 Stacker

8500 Engine & Pumps

Electrical

Transmission

Filters

Cooling Systems

Exhaust

Hydraulic Pumps

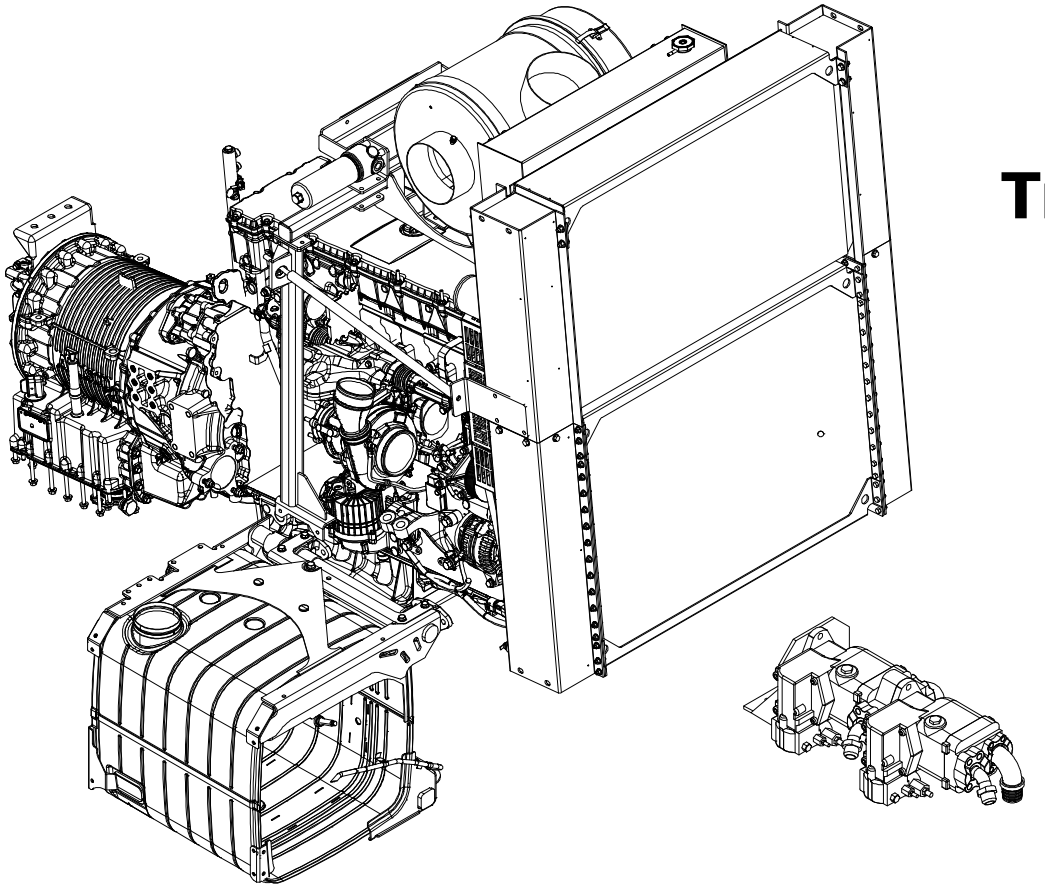

Engine Exhaust

Back

Home

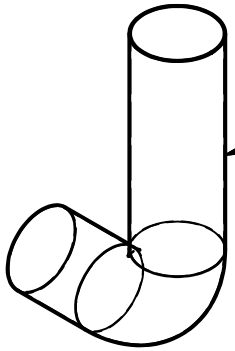

Turbo Exhaust Elbow Part #1490-6233

Exhaust V-Band Clamp Part #1490-5982

Turbo Exhaust Adapter Part #1490-6140

Engine Electrical

Back

Home

Alternator, MTU 24V 150A Part #1490-7349

Main Disconnect Switch Part #1490-4911

Batteries are Group 31 (995 Cold Cranking Amps)

Engine Cooling System
MTU 1300

Back Home

Complete MTU Radiator Assy Part #83500008

Coolant should be replaced every 2000 hrs with a 50/50 mixture (75qts)

Transmission Components

Back

Home

Allison E027310 4500RDS 6-speed Transmission Part # 83500002

Gen 5 Shifter Part # 1490-6422

(No detent spring required)

Filters

Partial List of T. E. S. Approved Oils

Joystick Control

Hydraulic Pump Components MTU

Back

Home

Double PVG 100 Pump Set #1490-6272

Pump Seal Kit Part #1490-5480 2 required
Pump Seal Kit Part #1490-6933 2 required

Pump Front Shaft Seal #1490-5632

Pump Drive Shaft Part #1490-7200_Unit A1013-A1045

1350 Pump Drive Engine Flange Yoke Part #1490-6390

1350 Pump Drive U-Joint With Grease Zerk Part #1490-6788

8500 Joystick Control
1490-6584

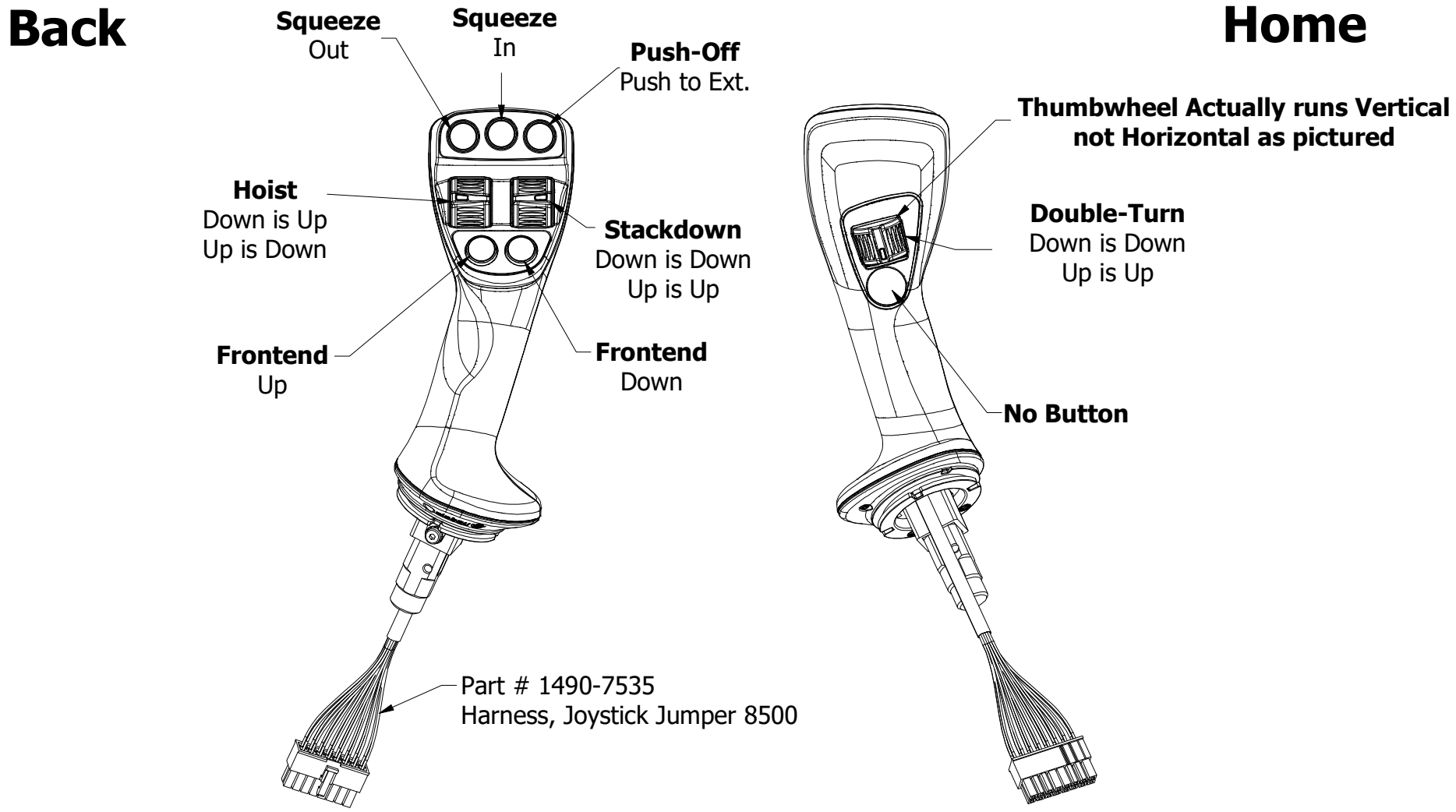

Seat Components

Back

Home

Standard SST Hi-Back Seat
W/ TLV Air Suspension
Part # 1490-5880

Adjustable Shock W/Control Cable
Part # 1490-5949

Non-adjustable Shock W/Bushings
Part # 1490-5948

Seat Air Pump W/Brass Fittings
Part # 1490-5991

Non-adjustable Shock Only
Part # 1490-5852

Unit Control
Monitor Assembly

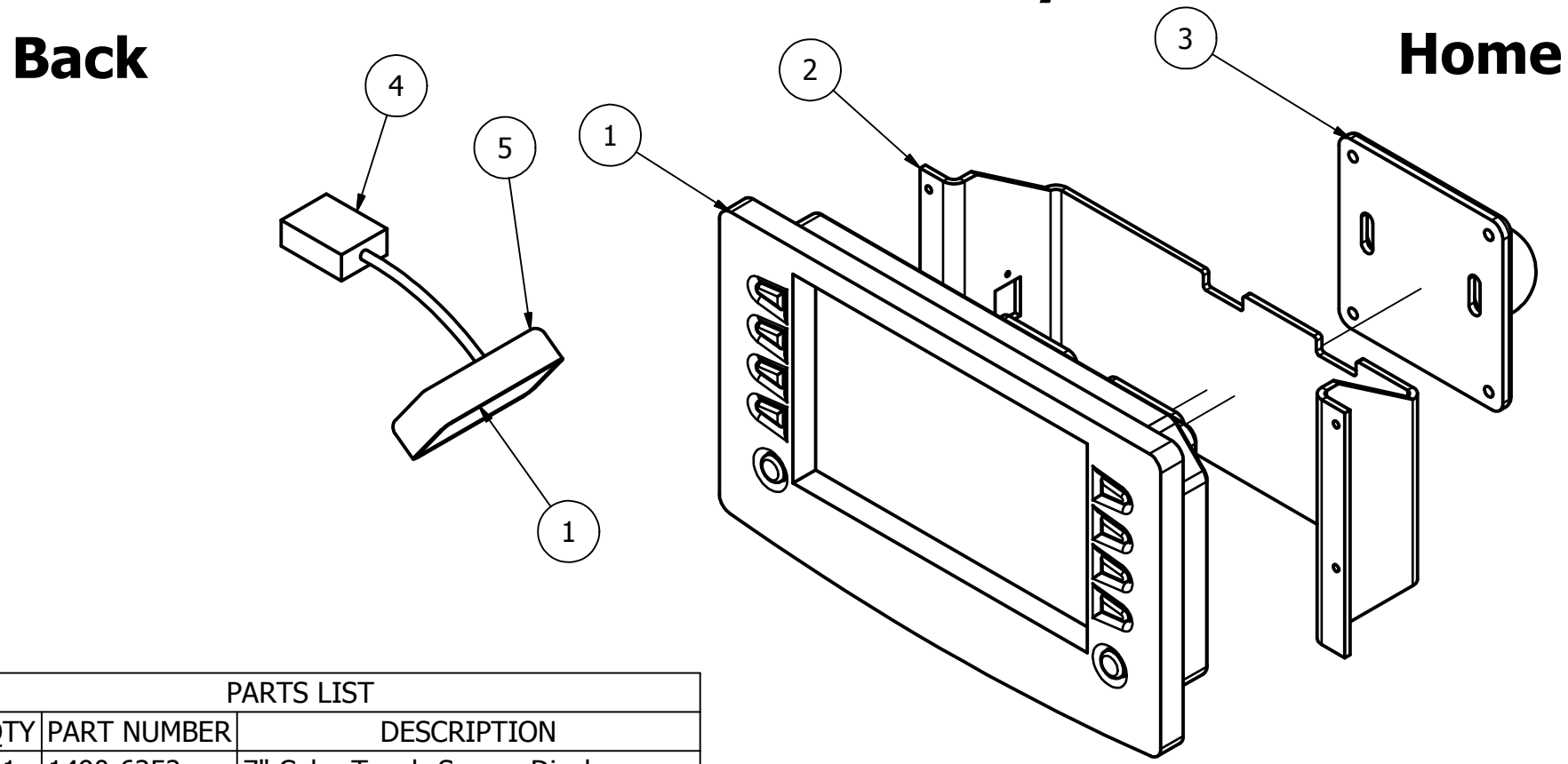

PARTS LIST			
ITEM	QTY	PART NUMBER	DESCRIPTION
1	1	1490-6252	7" Color Touch-Screen Display
2	1	1490-6276	Display Mount Plate
3	1	1490-6402	Versa Base Mount W/1.5" Ball
4	1	1490-6451	USB bulkhead Port W/4-Wire Pigtail
5	1	1490-6086	23-Pin Connector
6	4	1490-6089	Connector Pins

Step & Toolbox Detail

Back **Home**

PARTS LIST			
ITEM	QTY	PART NUMBER	DESCRIPTION
1	1	2017A15	Step & Tool Box Assy
2	1	2017A16	Entry Step Weldment
3	1	2000-405	Toolbox Door
4	1	1490-4764	Small Hinge W/Zerk
5	1	1490-2442	Rubber Door Bumper

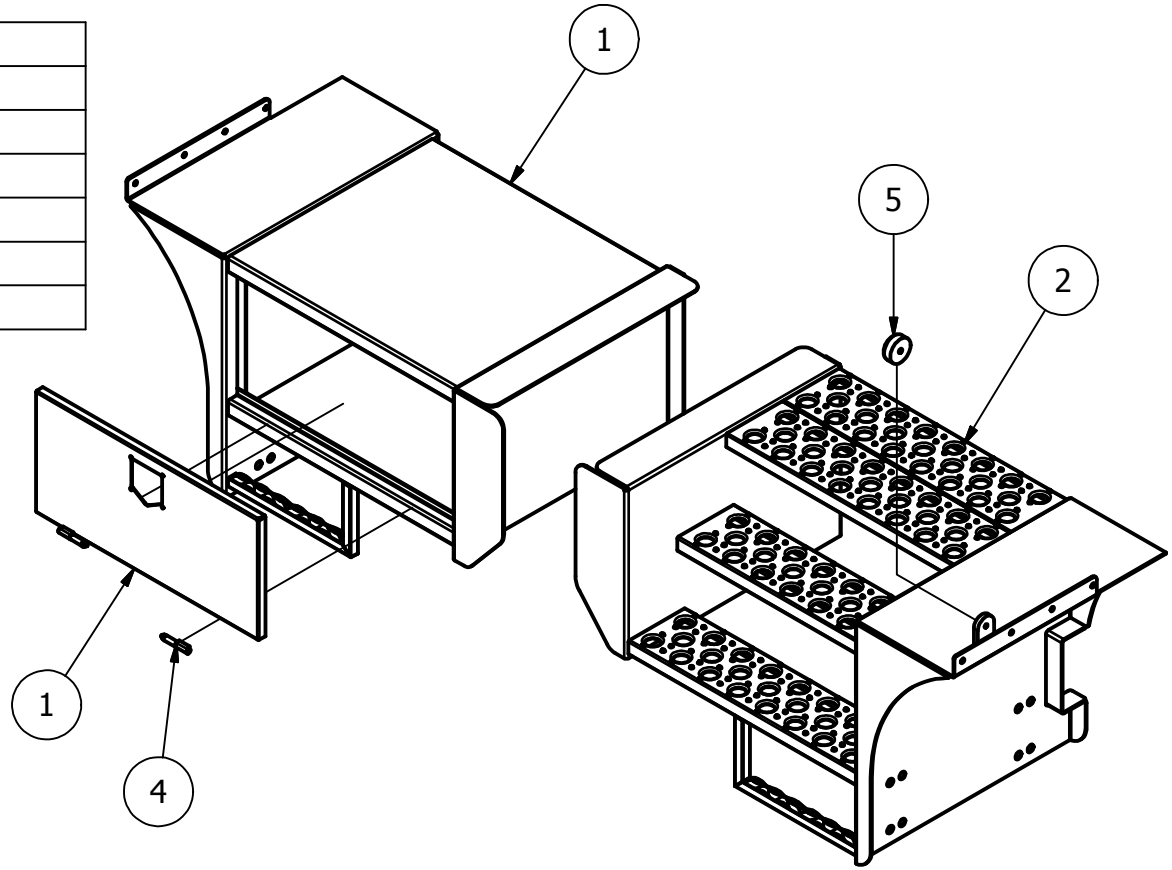

Stinger 8500 Stacker

Stacking Unit Index

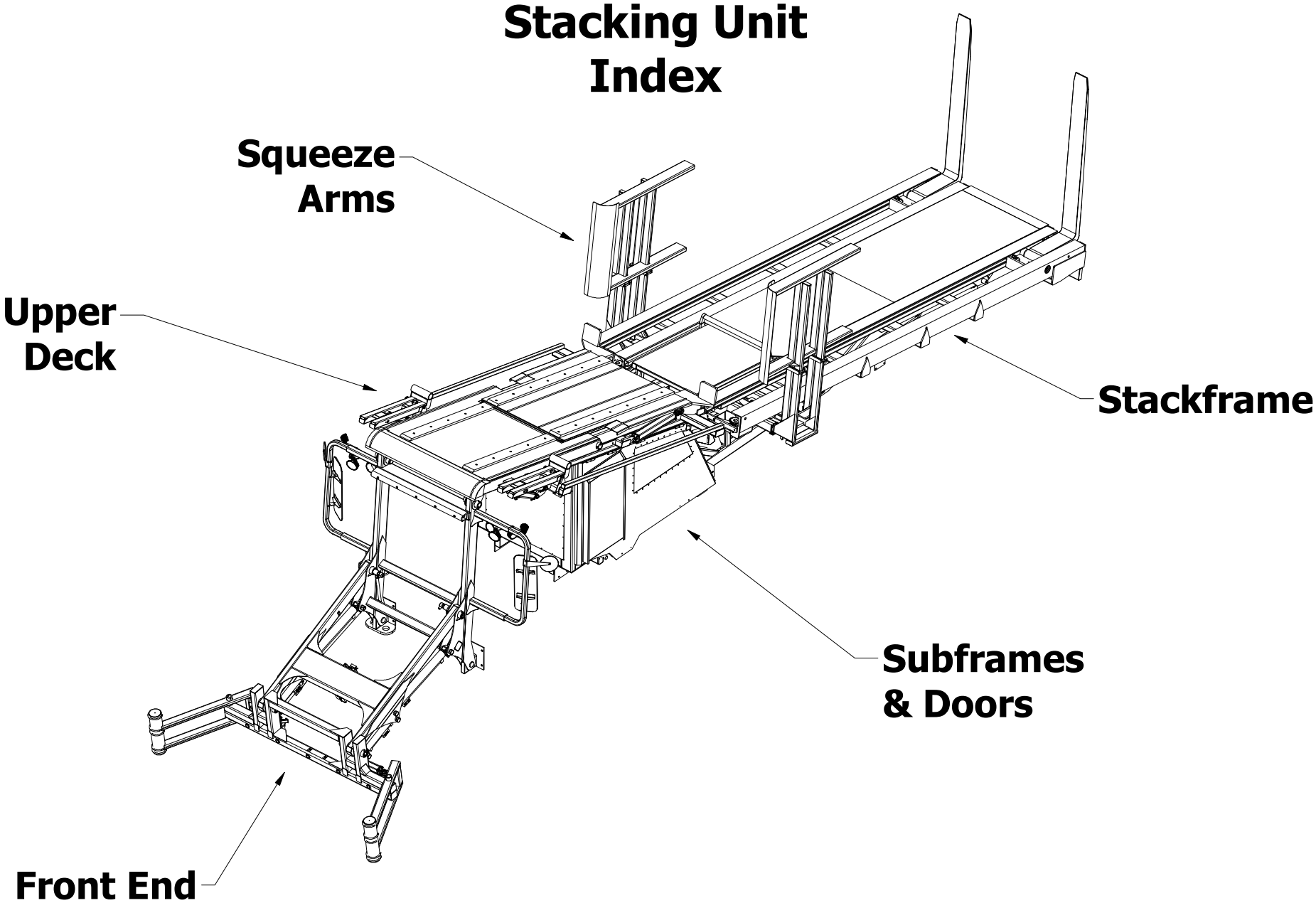

Subframe & Doors

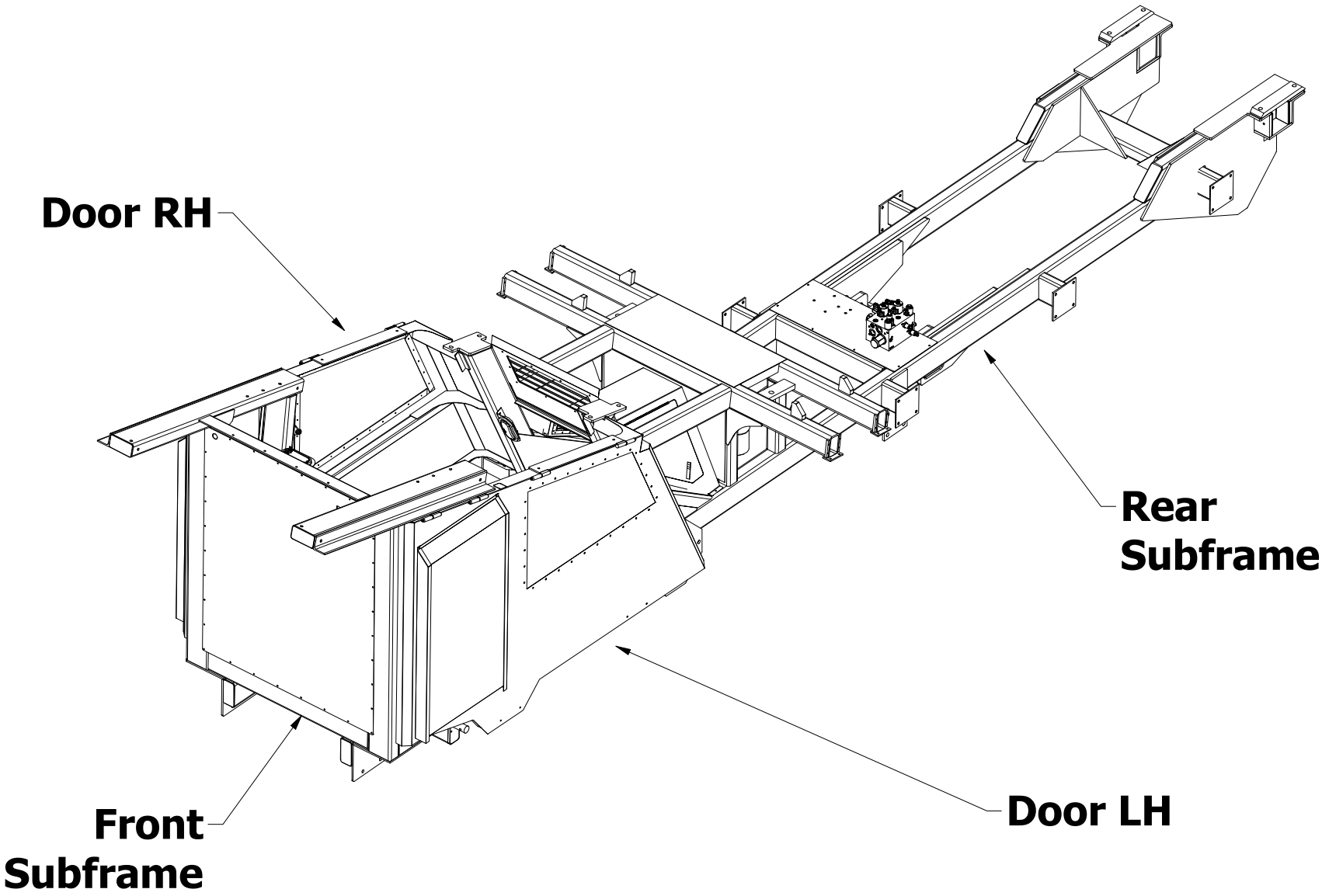

Stinger 8500 Stacker

Rear Subframe Assy

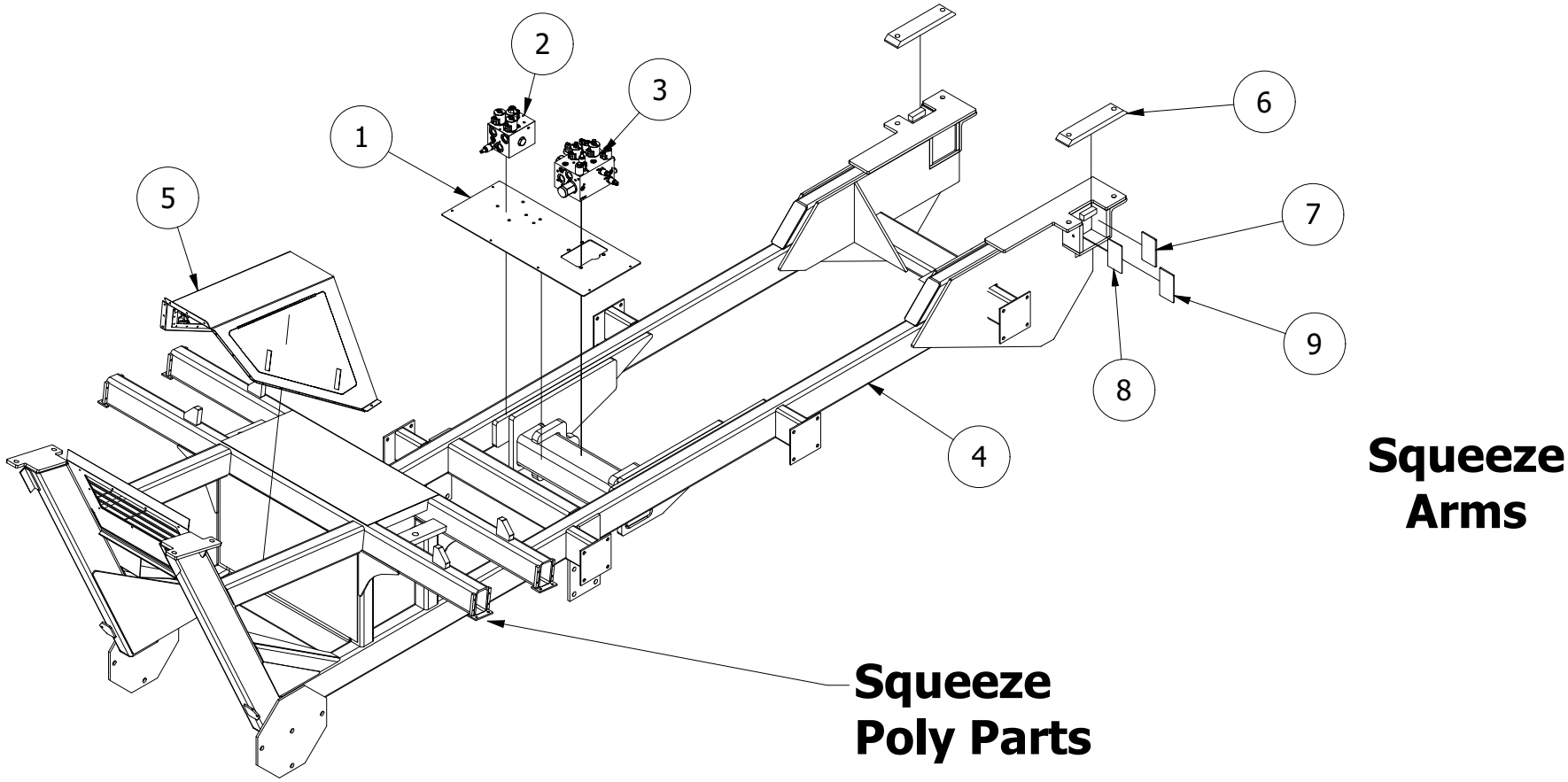

PARTS LIST				PARTS LIST			
ITEM	QTY	PART NUMBER	DESCRIPTION	ITEM	QTY	PART NUMBER	DESCRIPTION
1	1	8570-239	Valve Mount Plate	5	1	8570A96	DOG HOUSE W/DOORS
2	1	1490-6979	Hoist Contral Valve	6	2	8560A52	Stackframe Pivot Holddown Weldment
3	1	1490-5870	Main Control Valve #2	7	2	8570-275	Rear Subframe Pivot Shim .25
4	1	8570A2	8500 Subframe (Stinger Chassis)	8	2	8570-285	Rear Subframe Pivot Shim .12
				9	2	8570-286	Rear Subframe Pivot Shim .19

Squeeze Arm Assemblies

Back

Home

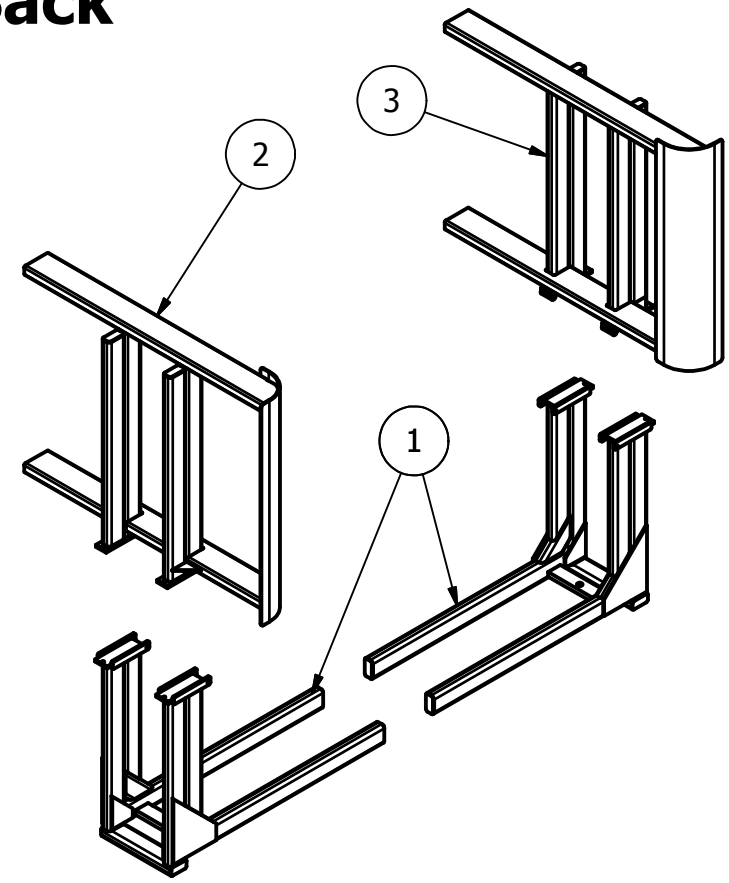

PARTS LIST			
ITEM	QTY	PART NUMBER	DESCRIPTION
1	2	8570A34	8500 Hingable Lower Squeeze Arm
2	1	8570A35	RH Upper Hingable Squeeze Arm
3	1	8570A36	LH Upper Hingable Squeeze Arm

Squeeze Poly Parts

8500 Front Subframe Assy

Back **Home**

A/C Parts

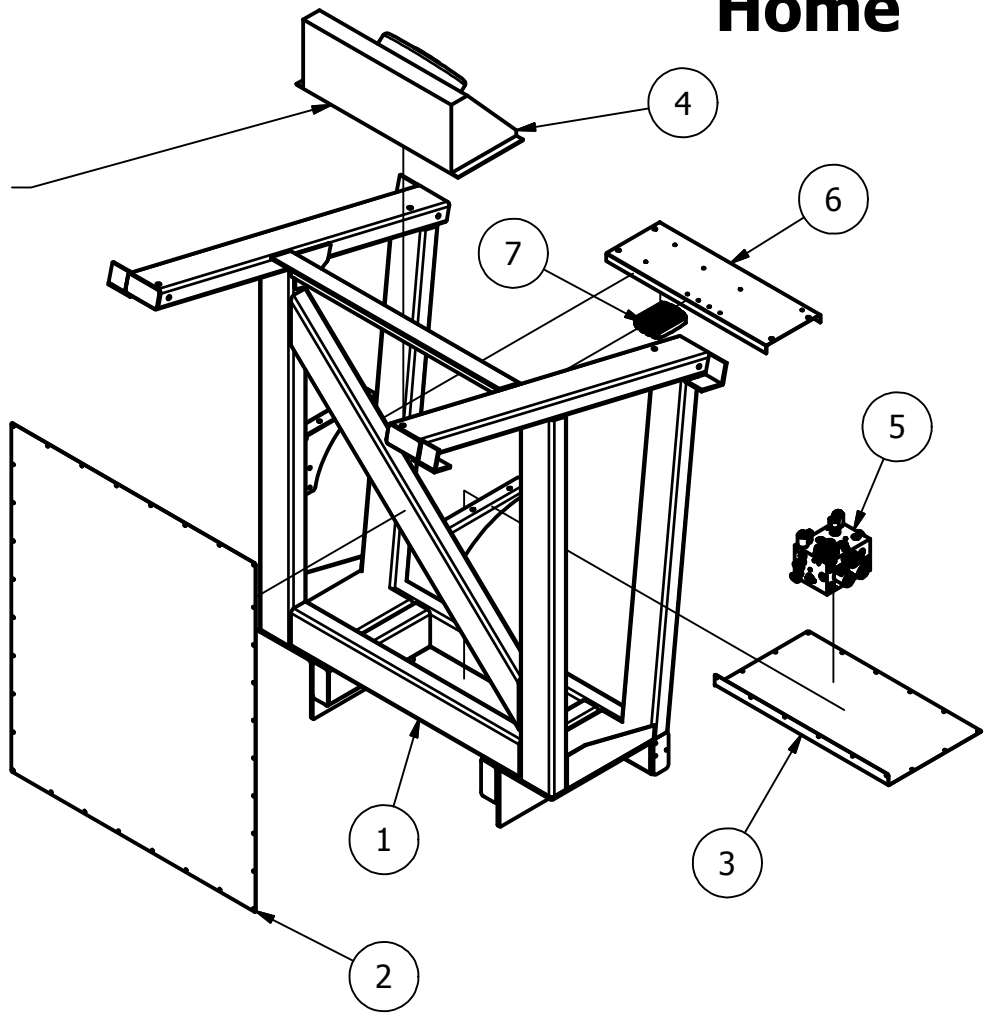

PARTS LIST			
ITEM	QTY	PART NUMBER	DESCRIPTION
1	1	8570A19	8500 Front Subframe
2	1	8570-140	Forward Subframe Front Screen
3	1	8570-173	Forward Subframe Bottom Screen
4	1	1490-3737	Remote A/C Condensor Complete Assy
5	1	1490-5870	Main Control Valve
6	1	5550-335	ECU Wiring Mount
7	1	1490-6083	Hydraforce 2415 ECU

Stinger 8500 Stacker

8500 Door Assy LH

UNITS: A1025 - A1045

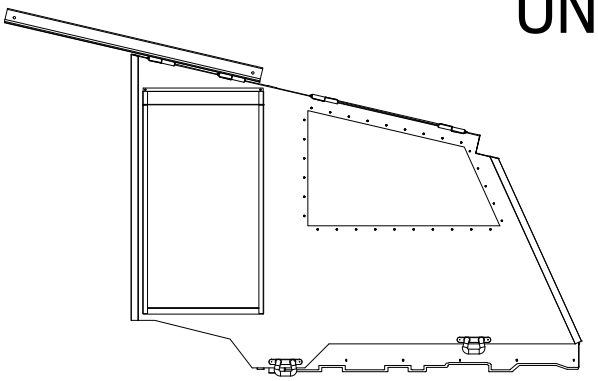

UNITS A1013 -A1024

PARTS LIST			
ITEM	QTY	PART NUMBER	DESCRIPTION
1	1	8570-138	8500 RH Screen Closure
2	1	8570-139	8500 LH Screen Closure
3	1	8570-136	8500 Rear Door Screen
4	1	8570-183	8500 Door Screen 10-Hole Strap
5	1	8570-184	8500 Door Screen 9-Hole Strap
6	1	8570-185	8500 Door Screen 6-Hole Strap
7	1	8570-186	8500 Door Screen 5-Hole Strap
8	1	8500 Door Seal	Trim Bulk Straight 8500 Door Seal
9	1	8570-137	8500 Front Door Screen
10	1	8570A76	8500 LH Door Assembly
11	1	8570-491	Bracket Engine Door Seal LH
12	1	8570-517	Door Seal Rubber LH
13	1	8570-493	Backer Strip, LH Rubber Door Seal
14	2	14904243	Molded Grab Handle

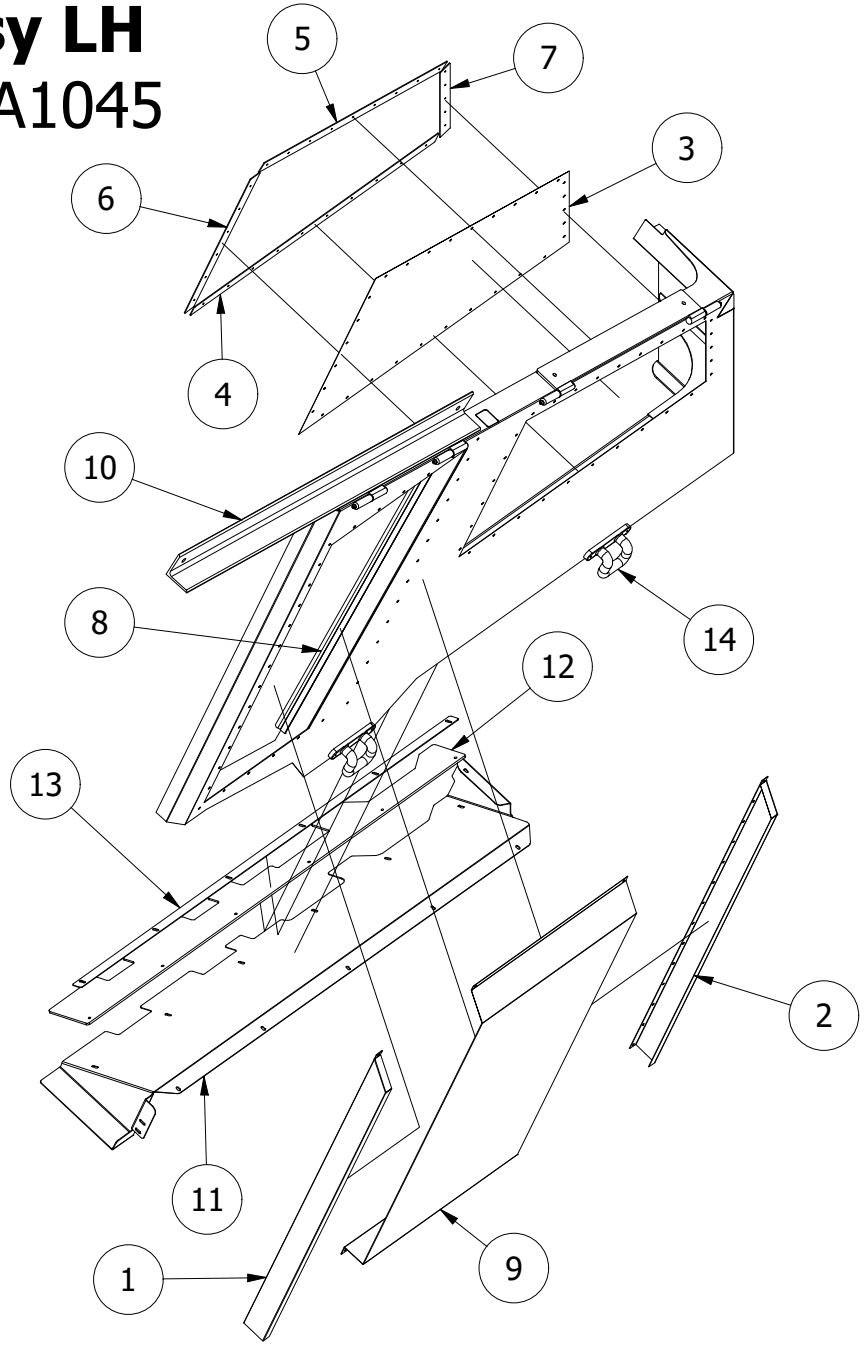

8500 Stackframe Assy

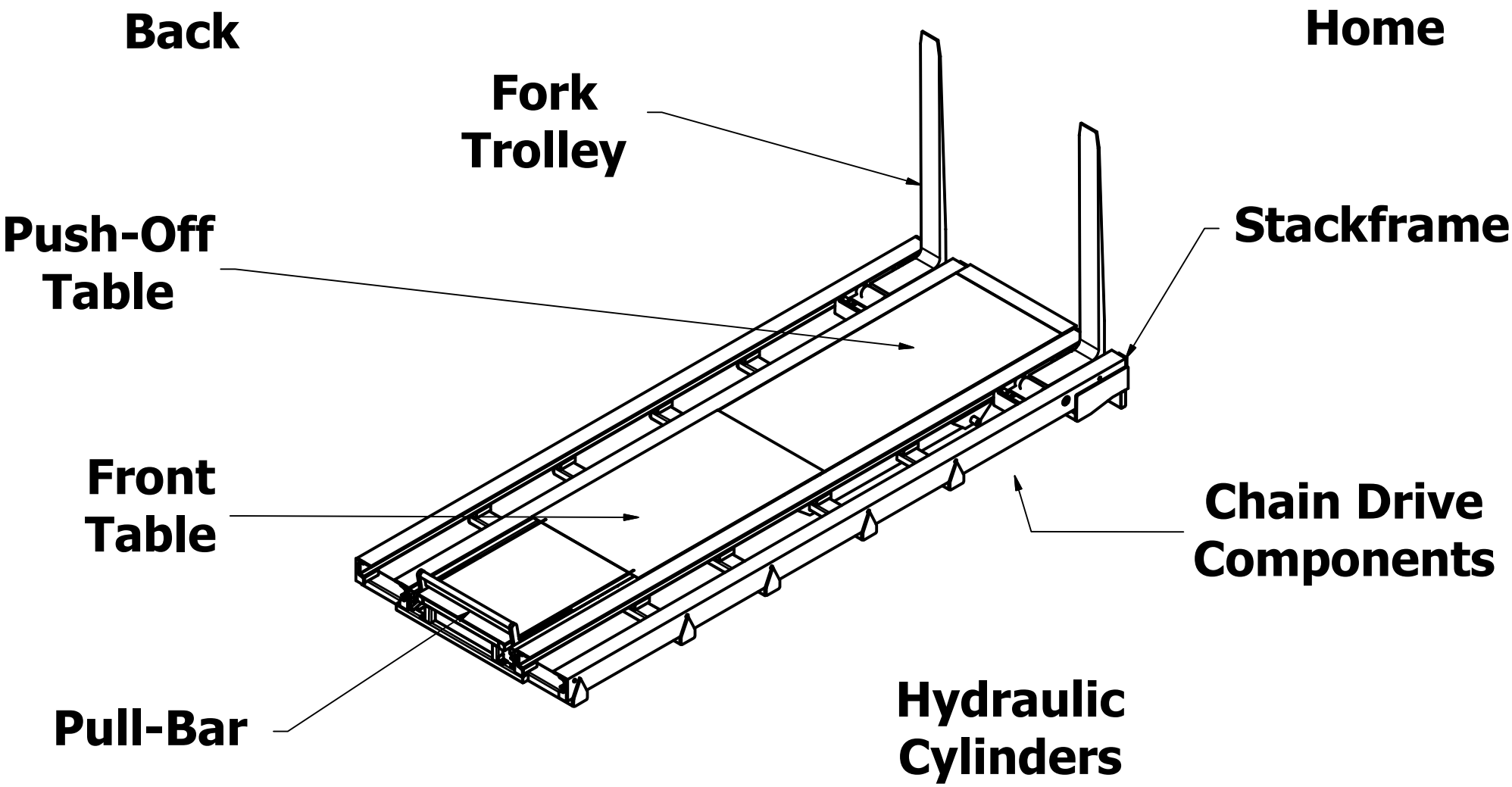

8500 Front Fill
Table Detail

Part# 8570A38

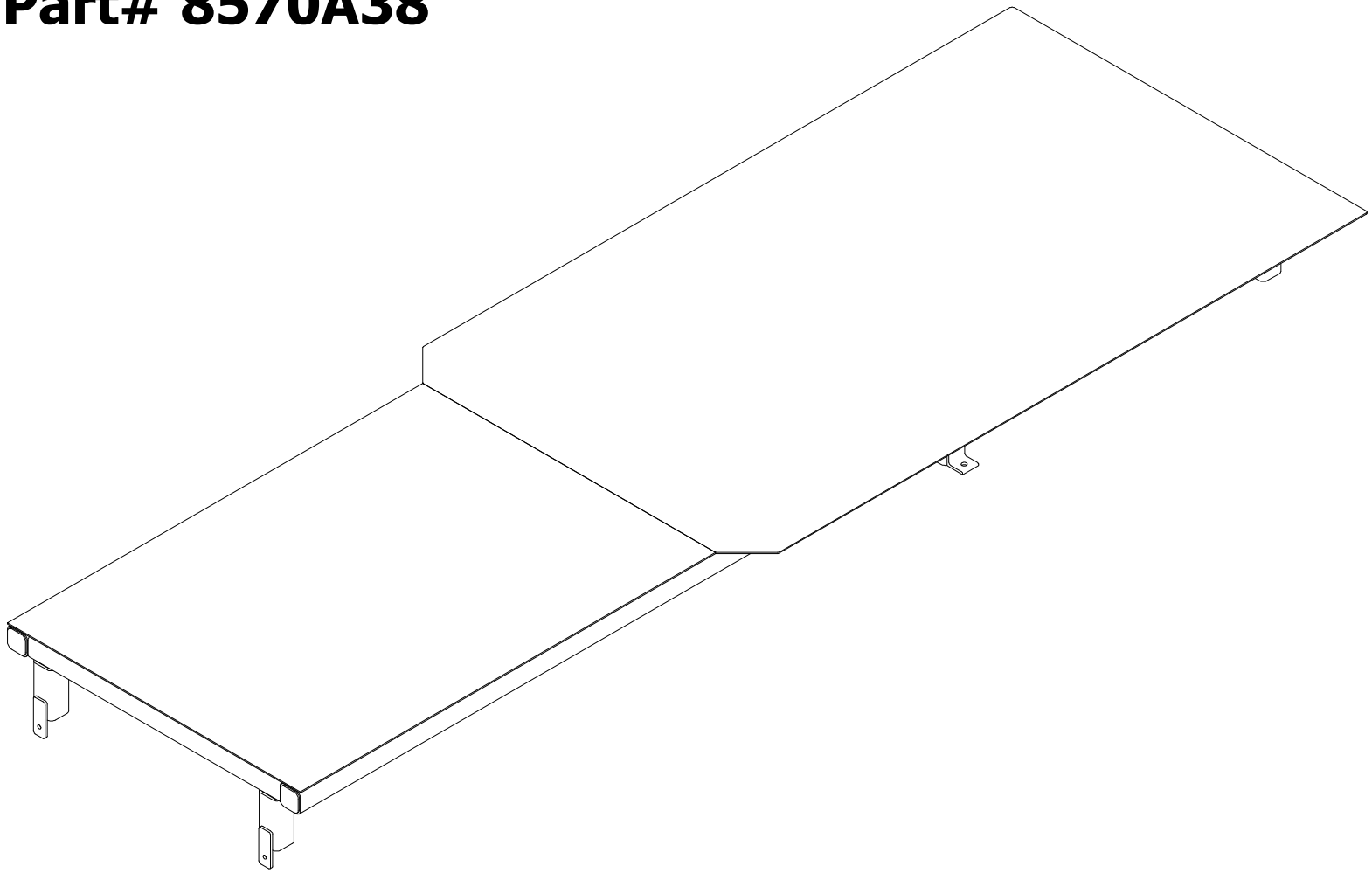

Stinger 8500 Stacker

Stackframe Assy 2

PARTS LIST			
ITEM	QTY	PART NUMBER	DESCRIPTION
1	1	8570A1A	Stackframe Weldment
2	2	8560-569	Cylinder Support Angle
3	2	1490-6969	Cam Roller Spacer
4	2	1490-6916	5" Cam Roller W/Nut & Lock Washer
5	4	1490-2030	Wear Bushing
6	2	1490-4055	Wear Bushing
7	2	8570A64	Front Bumpstop Bar (1")
8	2	1490-2065	Rubber Stops
9	1	8570-496	Limit Switch Mount 8500 Forks
10	3	8560-575	Limit Switch Bracket Extended
11	1	8570A60	Rear Chain Drive Shield
12	2	8570-454	Chain Shield Support Angle
13	4	1490-7629	Limit Switch, Pizzato

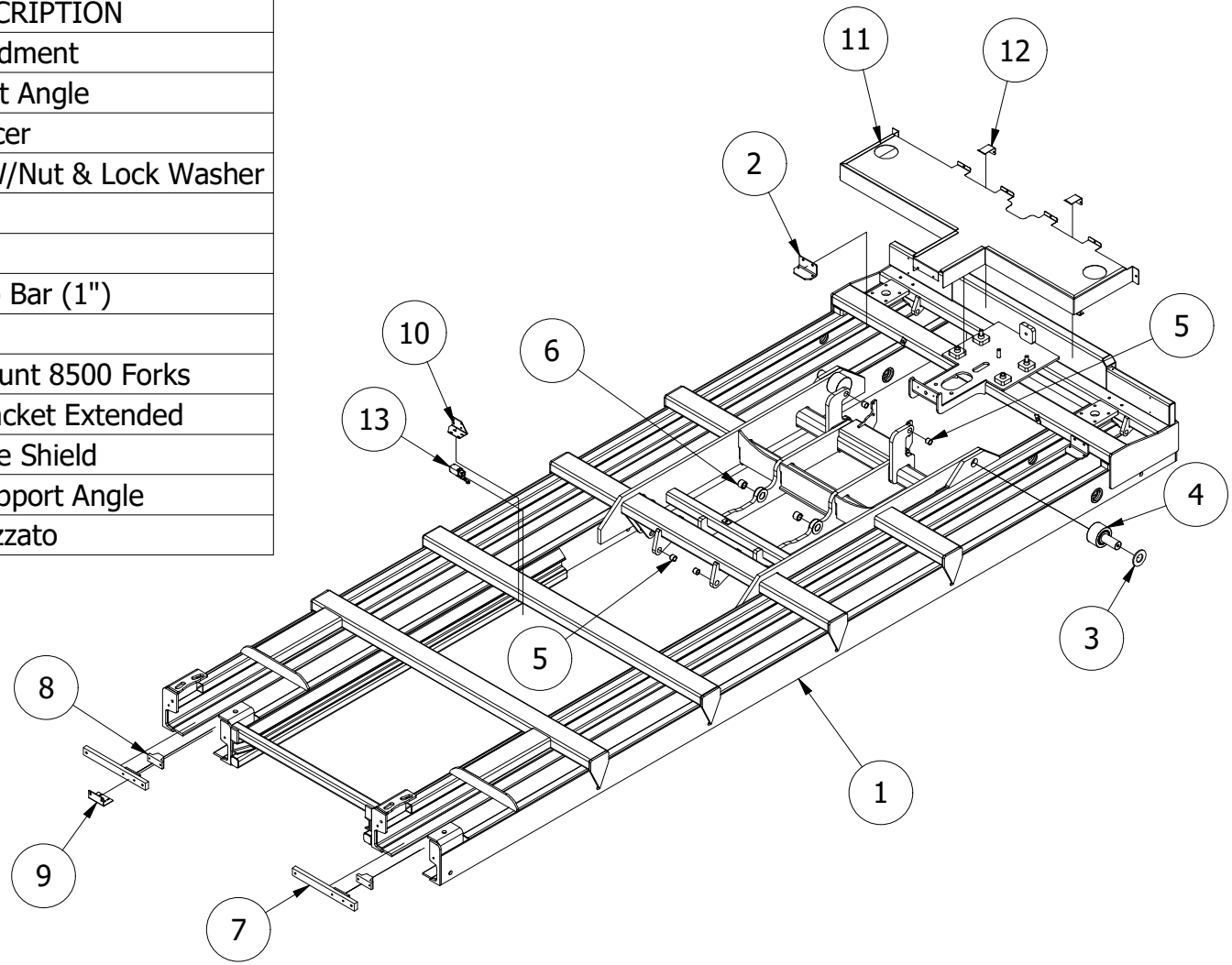

8500 Trolley Chain Drive

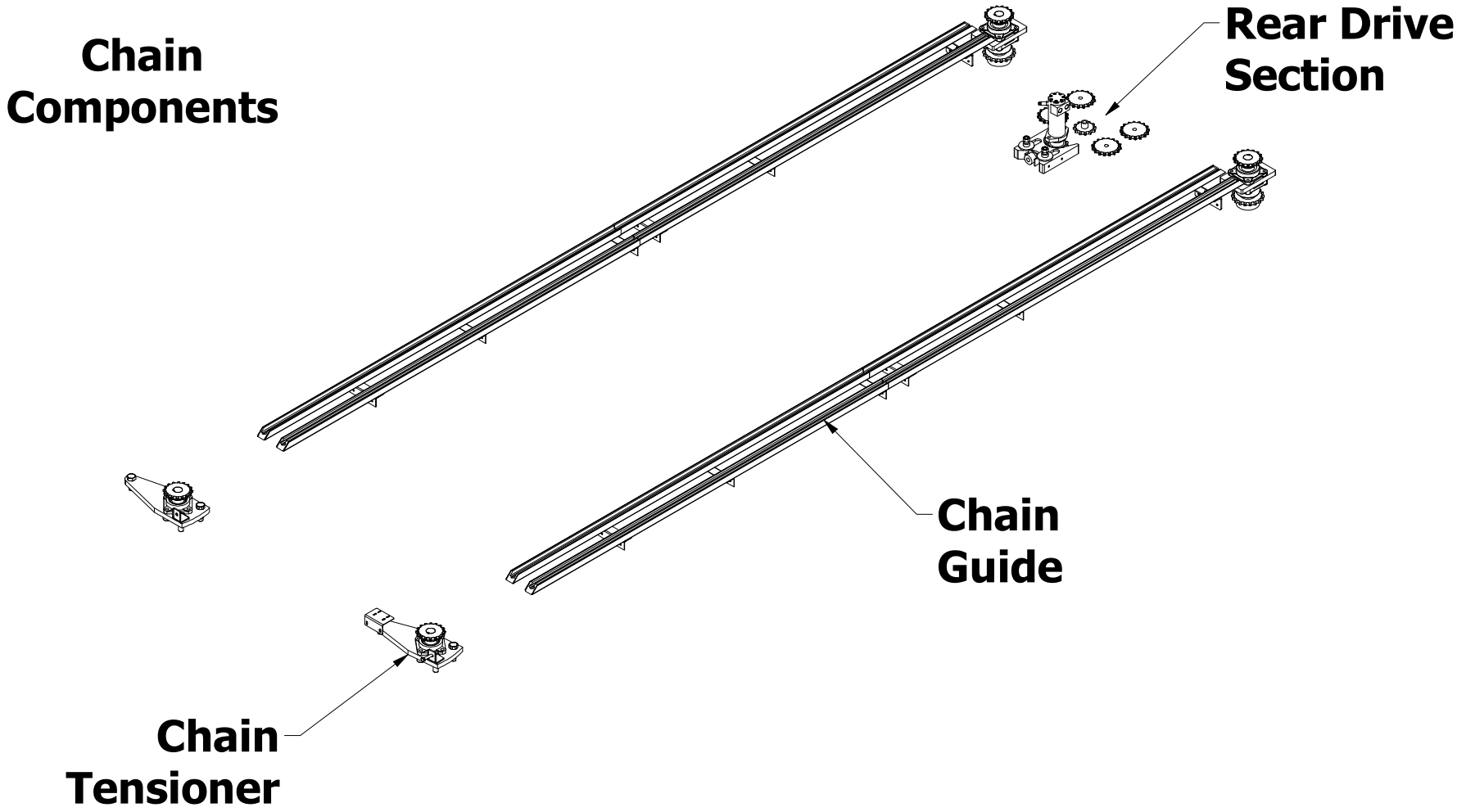

8500 Chain Tensioner

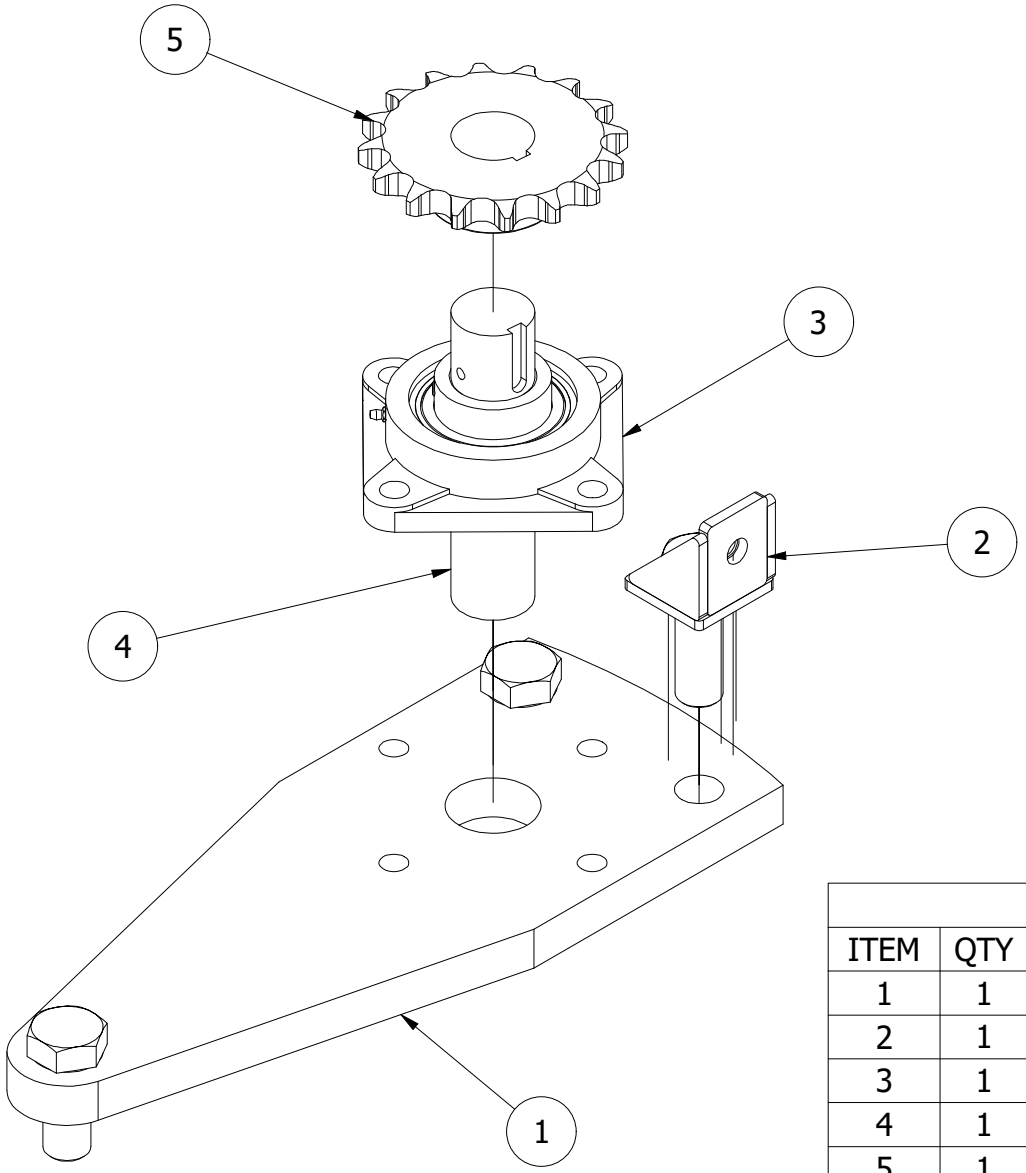

PARTS LIST			
ITEM	QTY	PART NUMBER	DESCRIPTION
1	1	8570A56	Front chain Tensioner Weldment
2	1	8570A57	Chain Tensioner Adj. Lug
3	1	1490-7668	starvars output
4	1	8570-319	Front Chain Tensioner Shaft
5	1	1490-6775	1-3/4 16T Driven Sprocket

8500 Rear Chain Drive

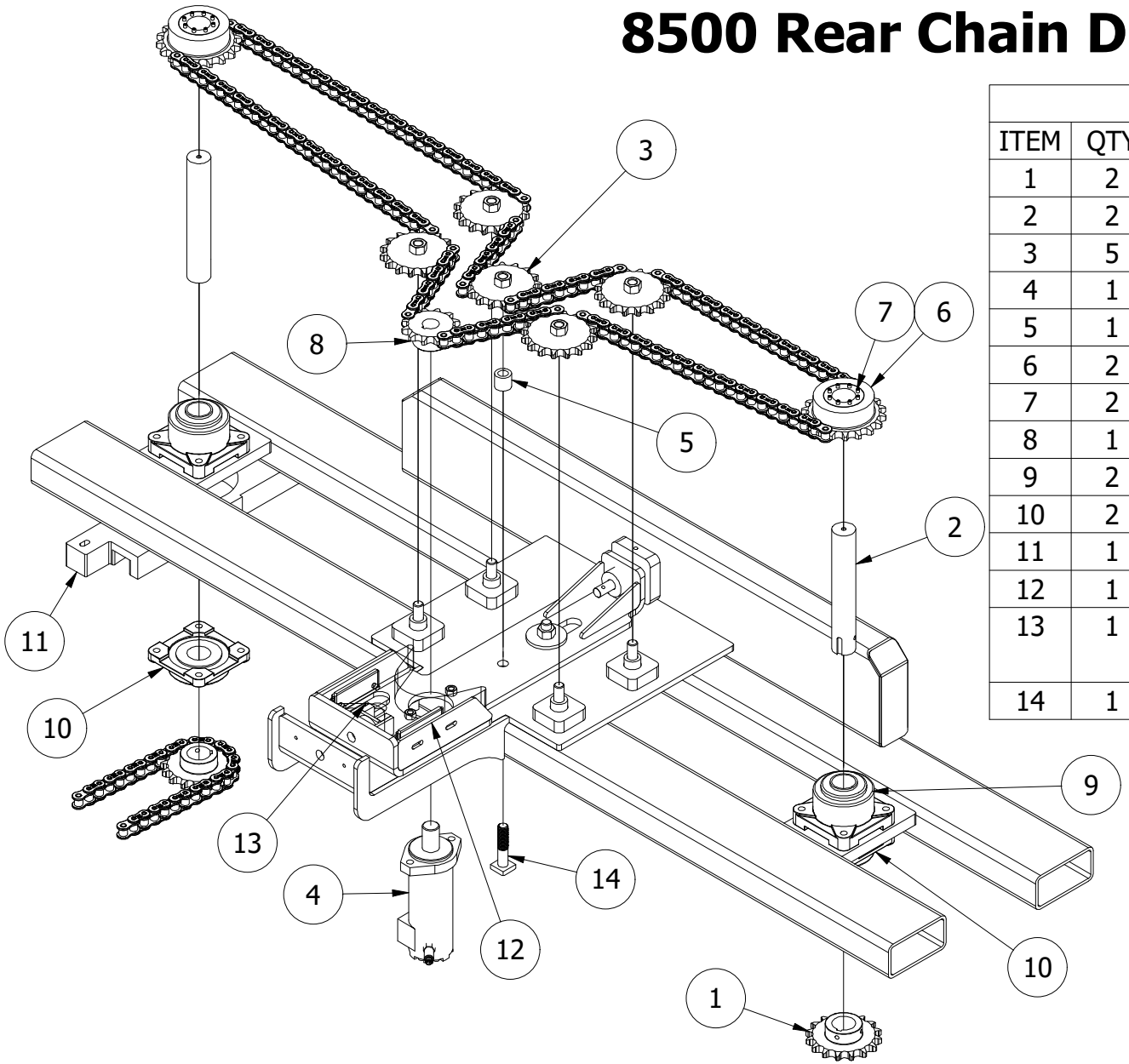

PARTS LIST			
ITEM	QTY	PART NUMBER	DESCRIPTION
1	2	1490-6775	1-3/4 16T Driven Sprocket
2	2	8570-363	Rear Drive Chain Shaft
3	5	1490-7144	3/4 ID 16T Idler Sprocket
4	1	1490-6988	24ci HYD MOTOR
5	1	8570-373	Sprocket Pivot Tube (Short)
6	2	1490-7143	SP80B-Sprocket 80B
7	2	1490-7145	B-LOCK B112x1-3/4
8	1	1490-7146	SP80B_base-Sprocket 80B
9	2	1490-7246	1-3/4 4-BOLT TYP E BEARING
10	2	1490-7245	1-3/4 4-BOLT MED BEARING
11	1	8570-441	Poly Chain Guide
12	1	8570A79	Drive Chain Tentioner
13	1	8570-463	Chain Drive Motor Sprocket Poly Guide
14	1	1490-7460	T-BOLT 3/4x3-1/2

Drive Chain Components

Drive Chain Components

Back **Home**

The Drive Chain is 89 Side plates (180")

With 1 Master link and 2 Half links

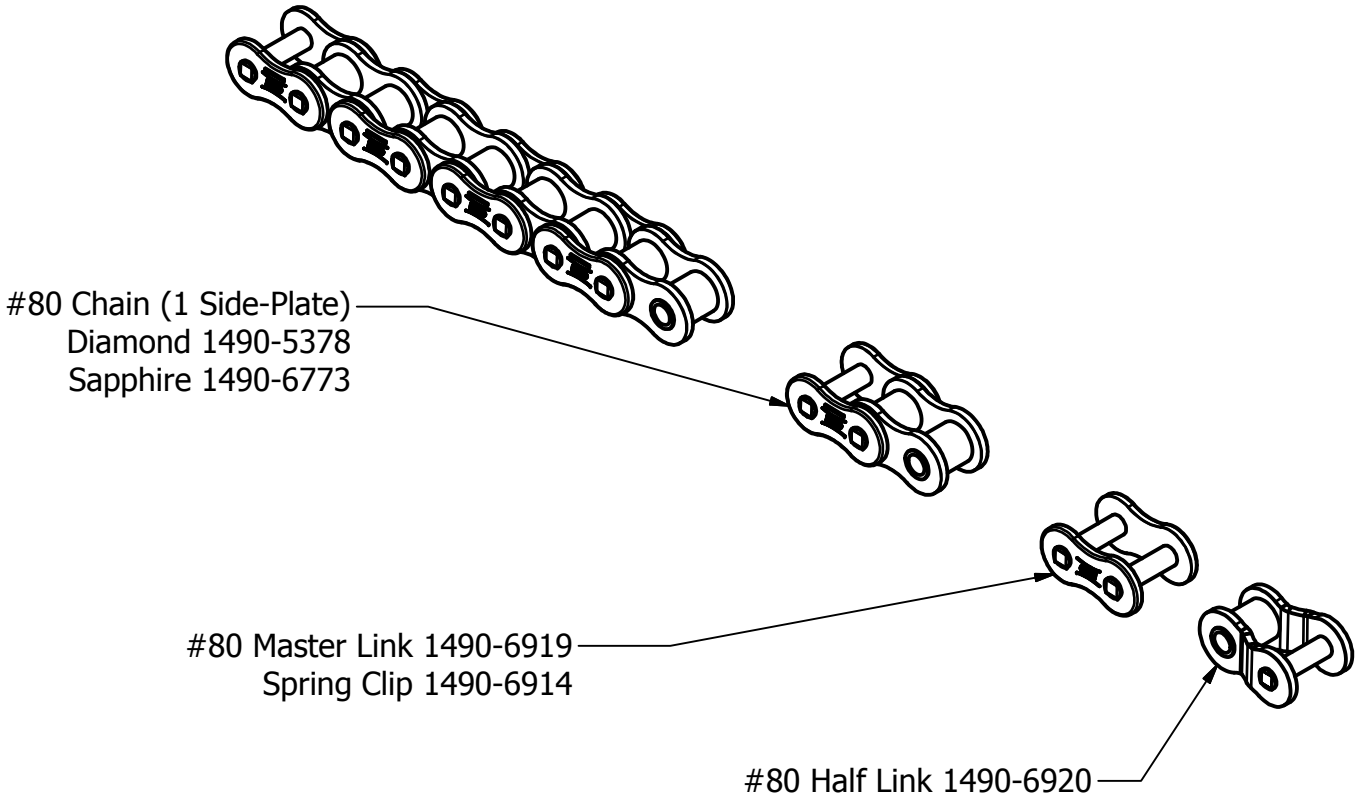

8500 Chain Guide Detail

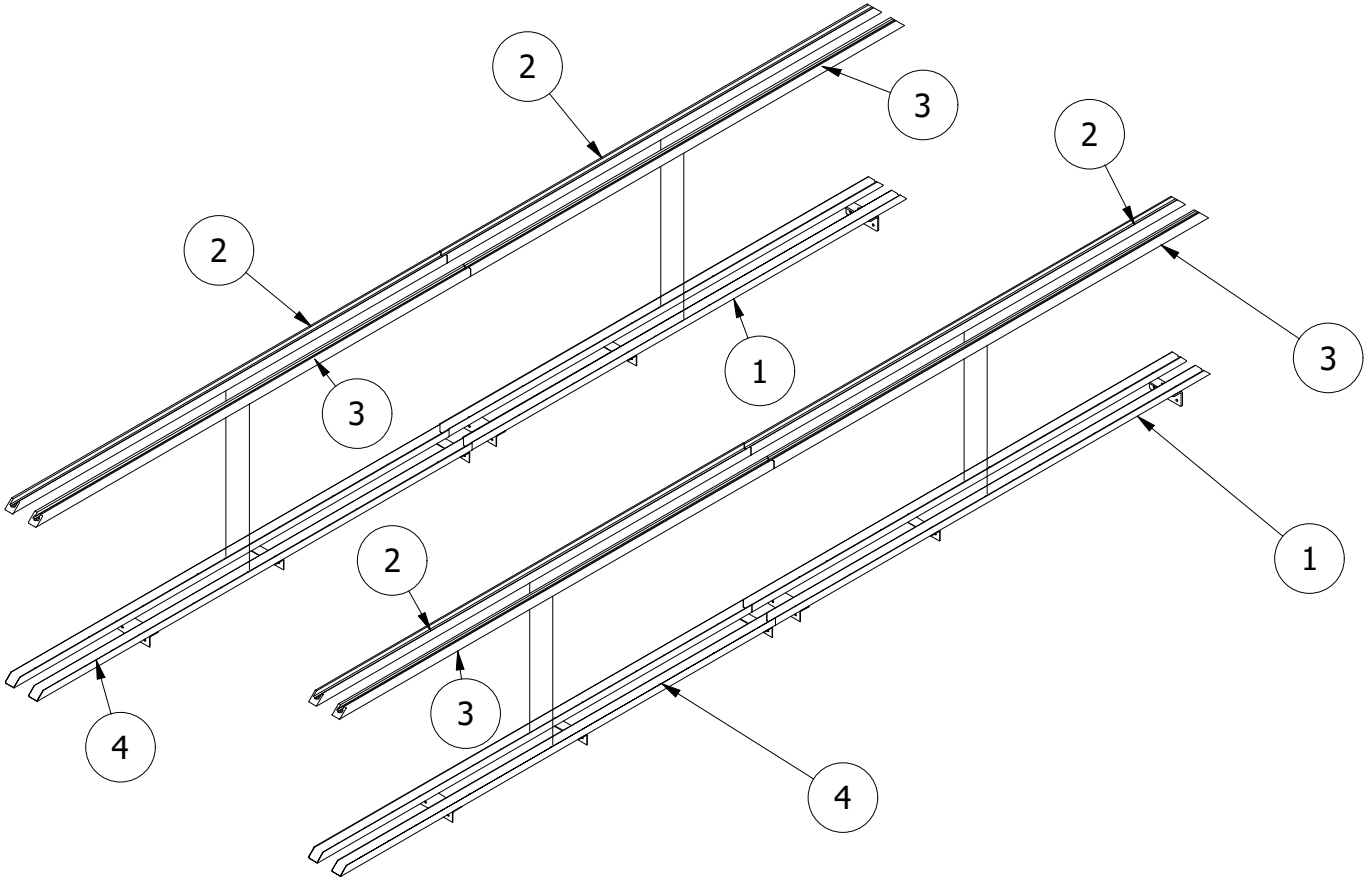

PARTS LIST			
ITEM	QTY	PART NUMBER	DESCRIPTION
1	2	8570A10	Chain Guide Track Weldment Rear
2	4	1490-6925	#80 Open Chain Track
3	4	1490-6926	#80 Closed Chain Track
4	2	8570A84	Chain Guide Track Weldment Front

Trolley Chain Components

Back **Home**

The Chain is cut into 2 sections:
Section 1 is 119 Side plates (238") Rearward from the Trolley & Section 2 is 103 Side Plates (206") Forward from the Trolley. This Equals 444" Per Side. There are 2 Master links at the Trolley Connections, and 1 Master with 4 Half Links where the 2 chain sections join together.
Total length of chain W/Links is 450" Per Side.

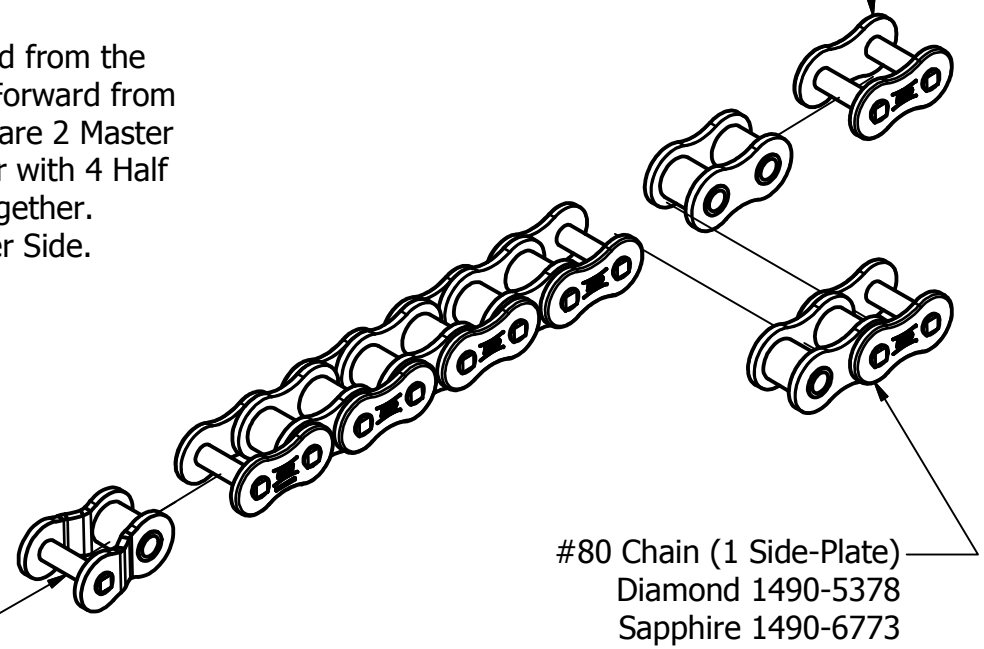

8500 Push-Off Table
Detail

Back **Home**

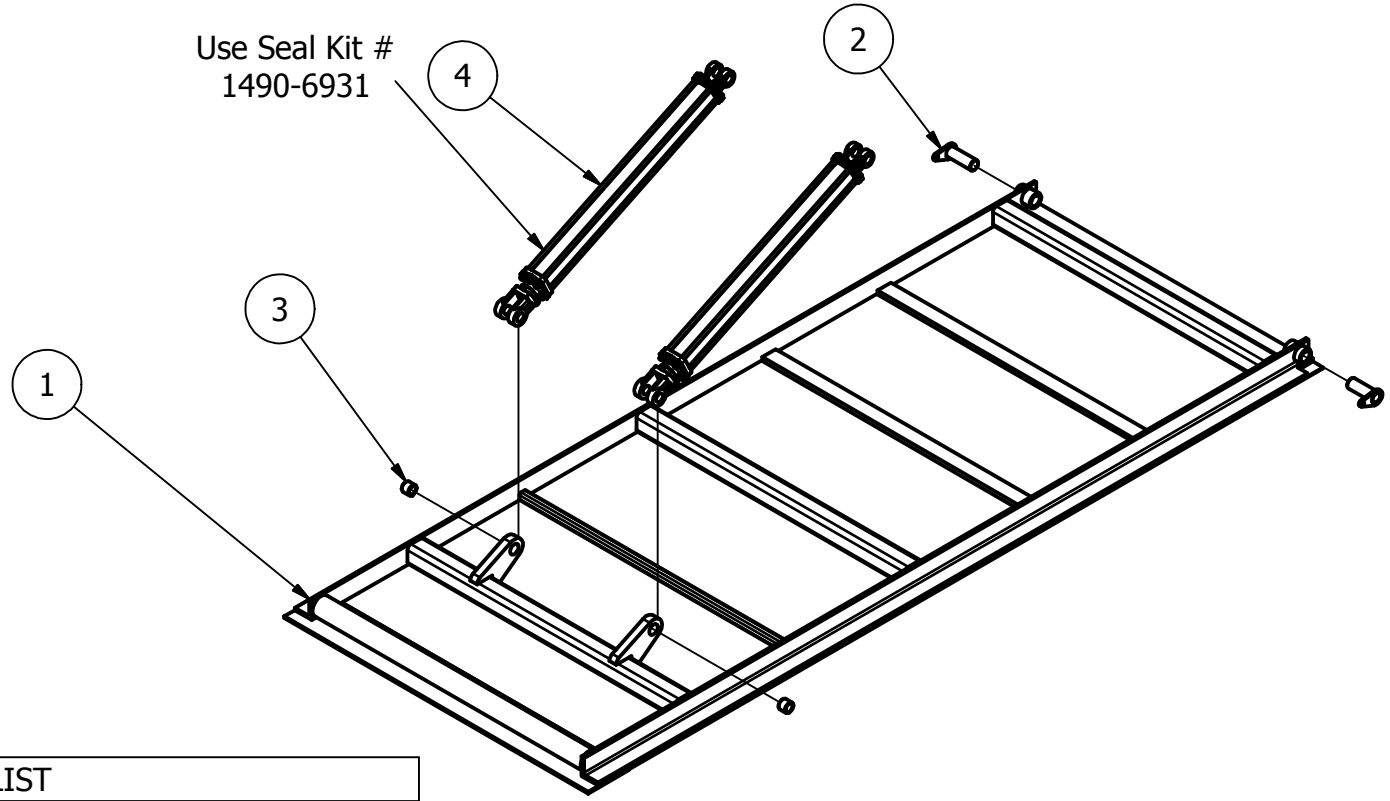

PARTS LIST			
ITEM	QTY	PART NUMBER	DESCRIPTION
1	1	8570A5	Rear Stackframe Push0Off Table
2	2	8560A34	Push-Off Table Pivot Pin Weldment
3	2	14902030	Wear Bushing
4	2	1490-6924	2 X 24 X 1-1/8

Stinger 8500 Stacker

8500 Pull-Bar Detail

PARTS LIST			
ITME	QTY	PART NUMBER	DESCRIPTION
1	1	8570A14	8500 Pull-Bar Weldment (2018)
2	4	1490-6992	PCI 3" Tapper Track Roller
3	4	Lock Washer	1" Lock Washe
4	4	Nut	1" UNF Nut
5	2	1490-6922	3 X 52 X 1-1/2 Cylinder
6	2	1490-2030	Wear Bushing

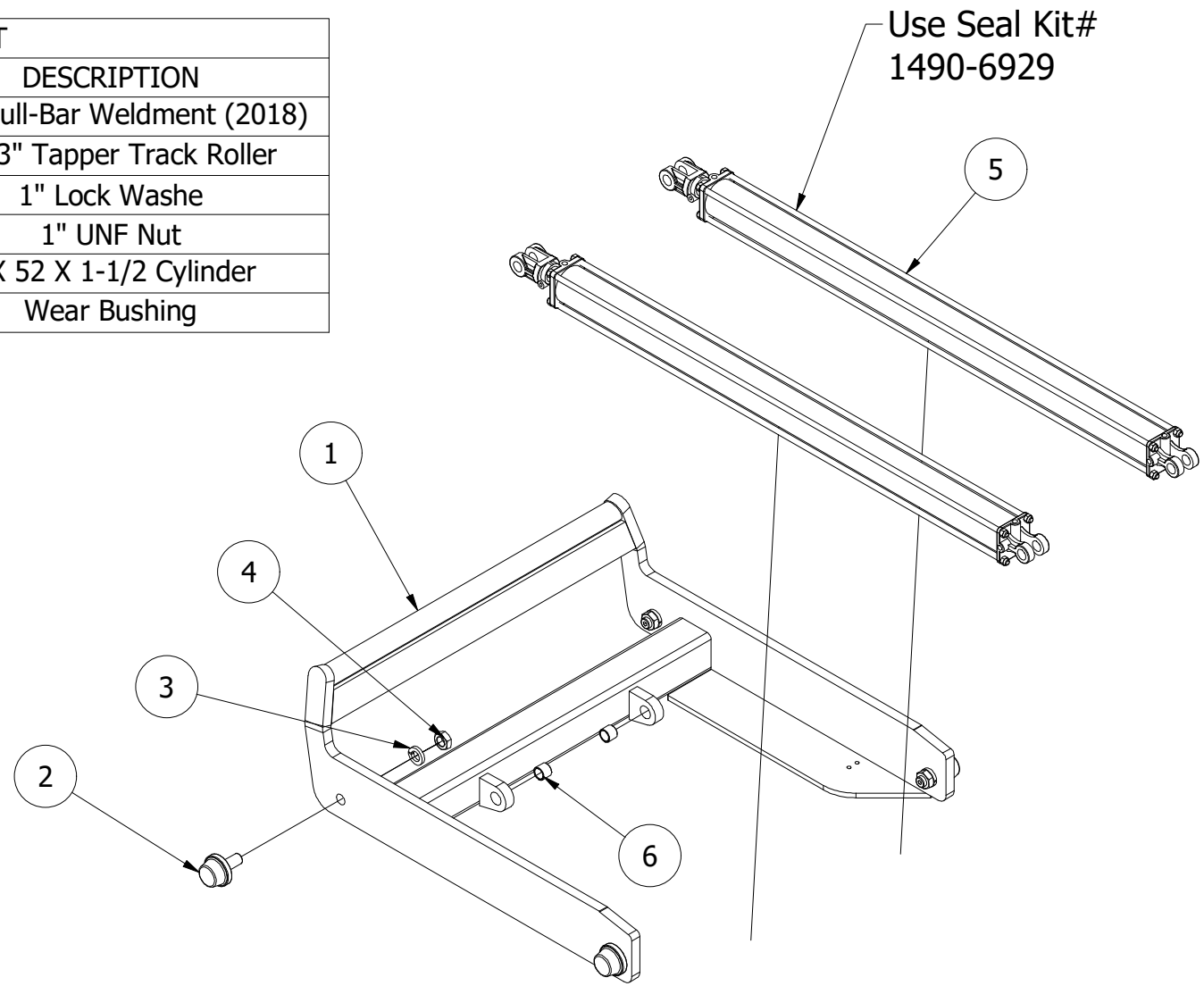

8500 Fork Trolley
Detail

Back

Home

PARTS LIST			
ITEM	QTY	PART NUMBER	DESCRIPTION
1	1	8570A12	Trolley Weldment
2	1	1490-6936	2.5" x 8" x 82" Full Tapered & Polished Fork
3	2	8560-126	Fork Stop
4	1	8560-123	Fork Connecting Pin
5	4	1490-6989	PCI 5" Tapered Track Roller
6	4	Lock Washer	1-1/4" Lock Washer
7	4	Hex Nut	1-1/4" Nex Nut

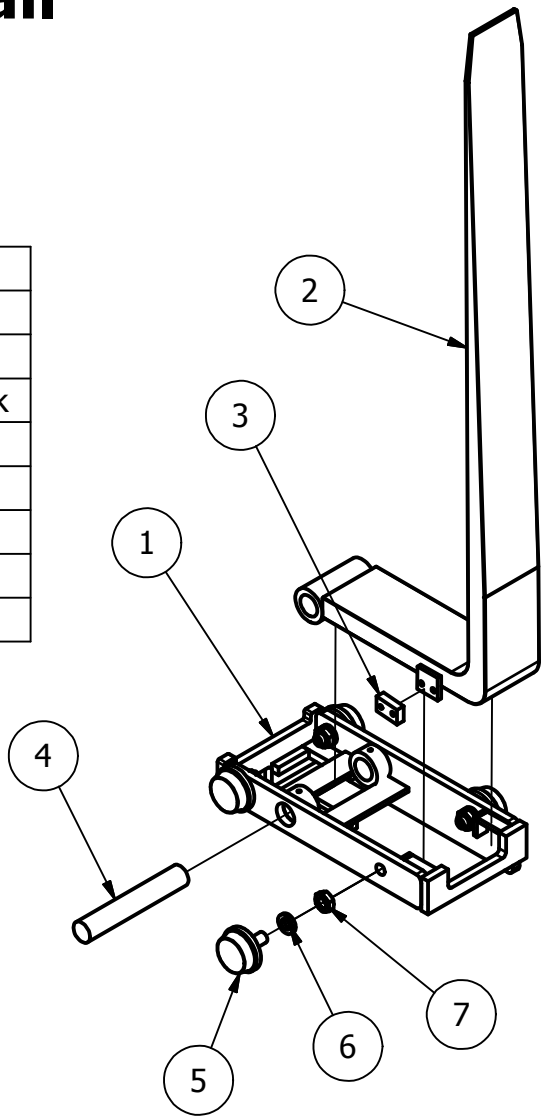

8500 Upper Deck Assy

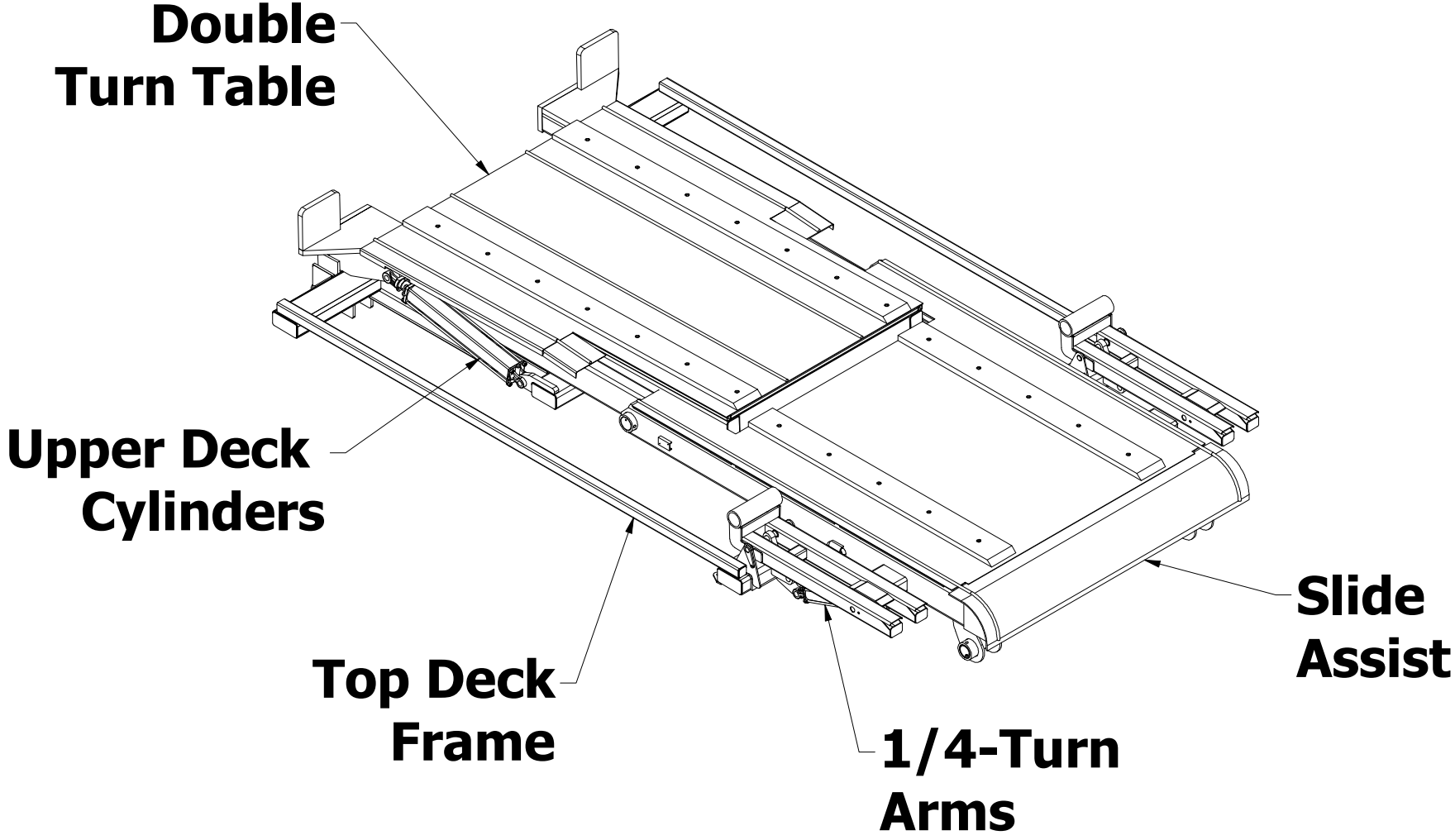

Upper Deck Cylinders

Back

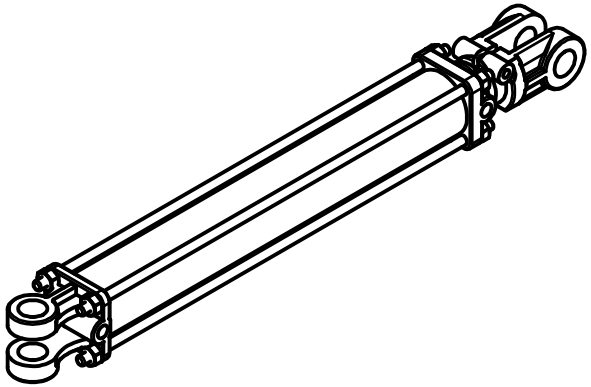

Double Turn Cylinders
3 X 22 X 1-1/2
1490-6908
(Seal Kit #1490-6929)

Home

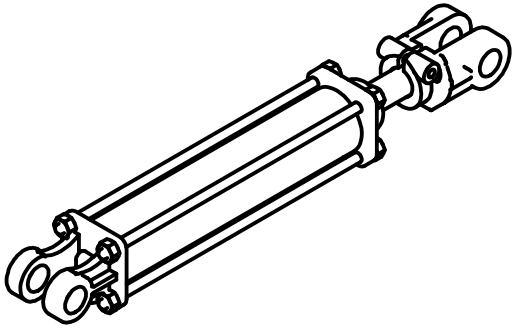

Slide Assist/1/4-Turn
2 X 8 X 1-1/8
1490-5146 & 1490-5145
(Ported Opposite each other
Both use Seal Kit 1490-4627)

Stinger 8500 Stacker

8500 Top Deck Assy

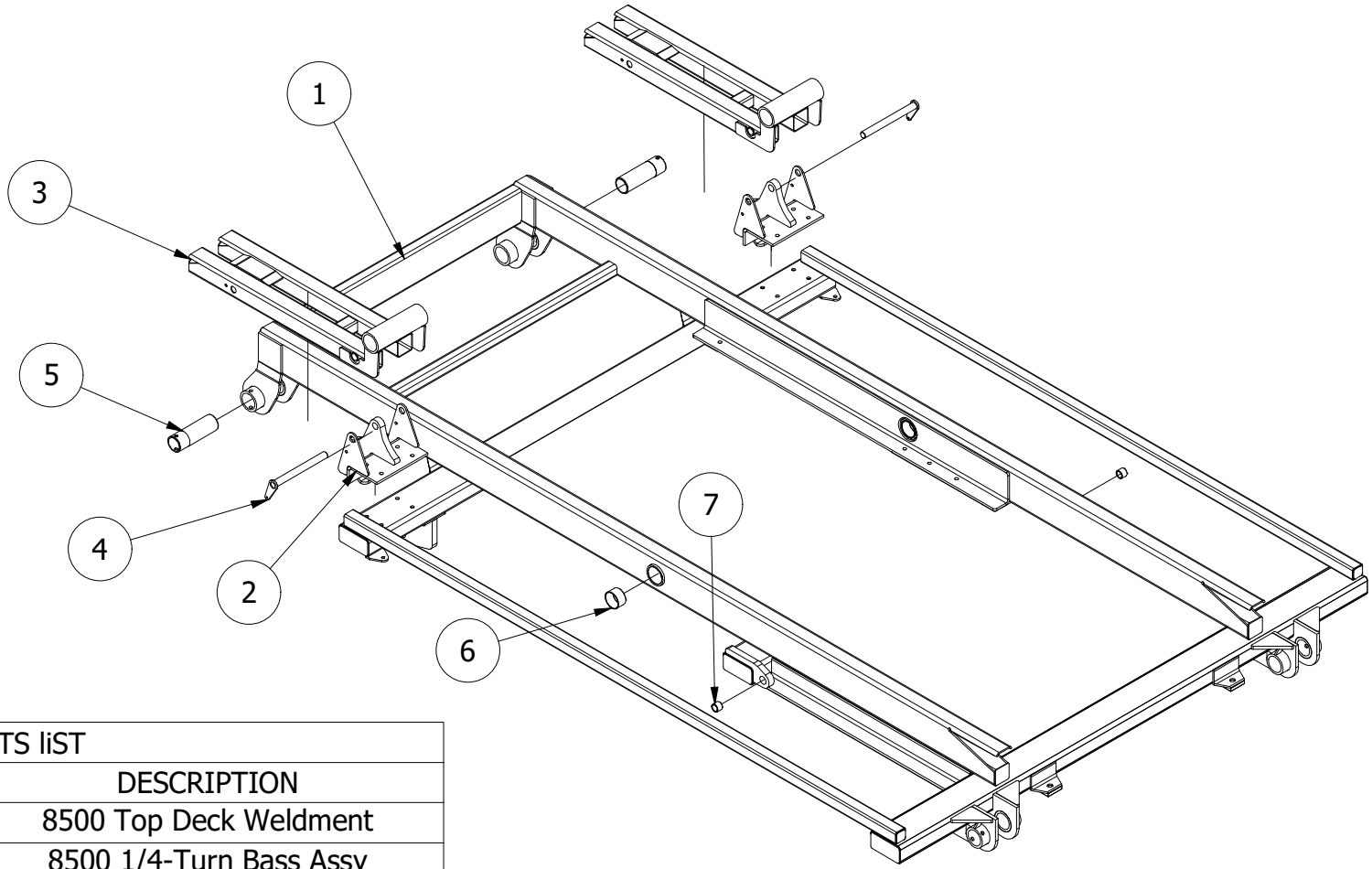

PARTS liST			
ITEM	QTY	PART NUMBER	DESCRIPTION
1	1	8570A52	8500 Top Deck Weldment
2	2	8560A83	8500 1/4-Turn Bass Assy
3	2	8560A82	8500 1/4-Trun Arm Weldment
4	2	8560A85	8500 1/4-Turn Pin
5	2	5540-111	500 Series Main Pivot Shaft
6	4	1490-4716	Front End Pivot Bushing
7	2	1490-2030	Wear Bushing

Stinger 8500 Stacker

8500 Slide Assist Assy

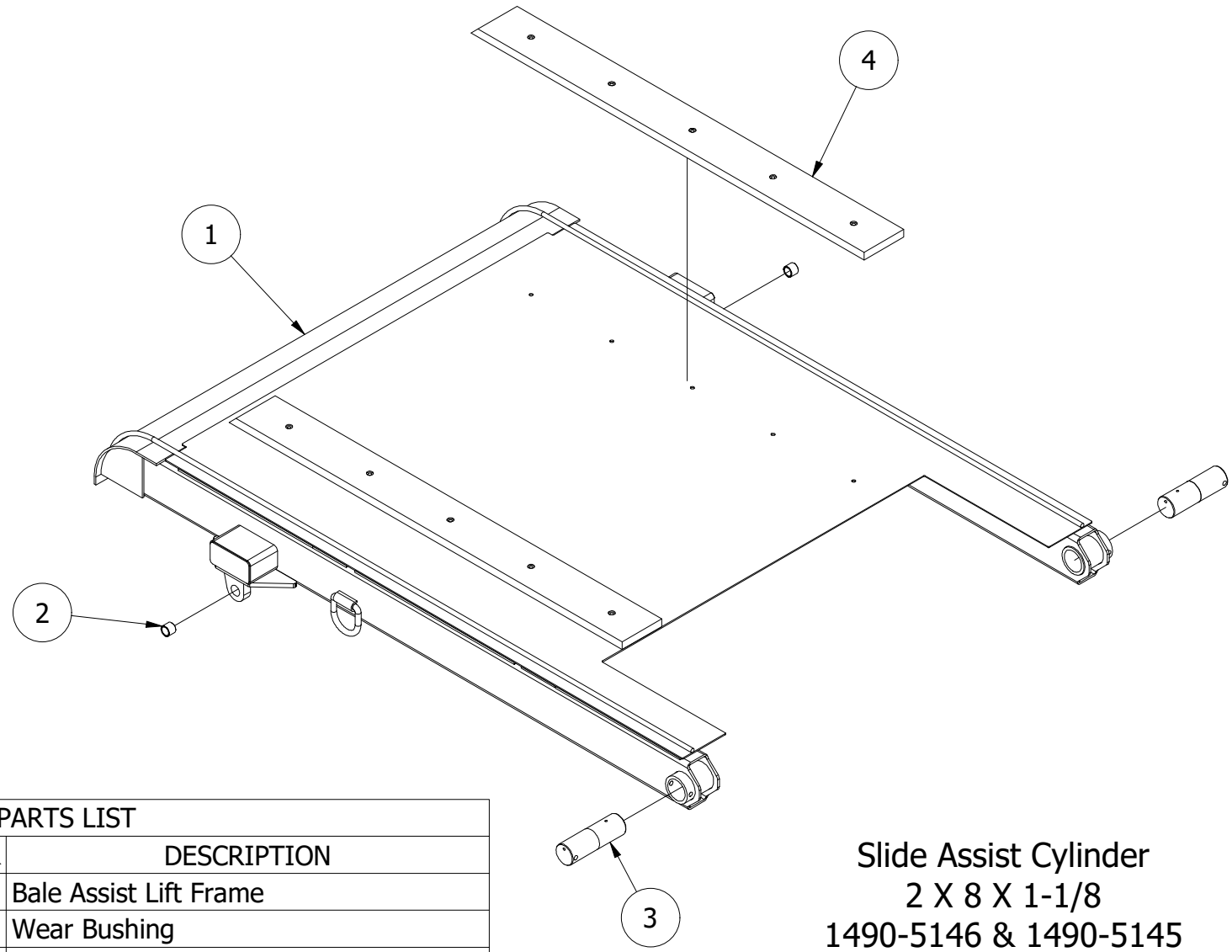

PARTS LIST			
ITEM	QTY	PART NUMBER	DESCRIPTION
1	1	8570A51	Bale Assist Lift Frame
2	2	1490-2030	Wear Bushing
3	2	8570-511	Slide Assist Pivot Shaft
4	1	1490-7155	8500 Poly Slide Rail (6" Bale Assist)

Slide Assist Cylinder
2 X 8 X 1-1/8
1490-5146 & 1490-5145
(Ported Opposite each other for LH/RH)
Both use Seal Kit 1490-4627

Stinger 8500 Stacker

8500 Double Turn Table

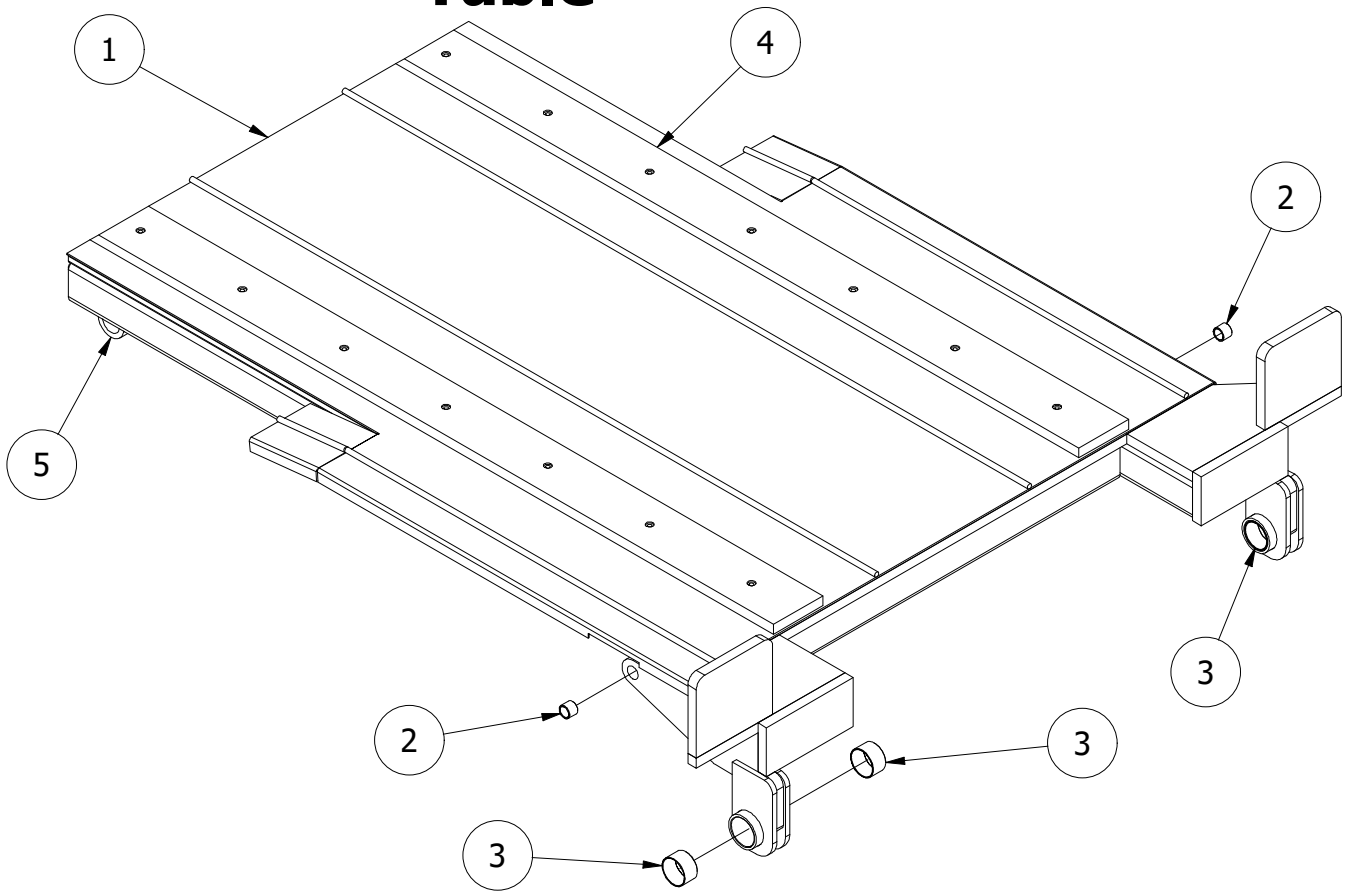

PARTS LIST			
ITEM	QTY	PART NUMBER	DESCRIPTION
1	1	8570A53	Double-Turn Table Weldment
2	2	1490-2030	Wear Bushing
3	4	1490-4716	Front End Pivot Bushing
4	2	1490-7154	8500 Poly Slide Rail (80.5" X 6" Double Turn)
5	1	1490-7446	4" Round Rubber Bumper

Hydrauic Cylinders

8500 1/4-Turn
Arm Assy

Back **Home**

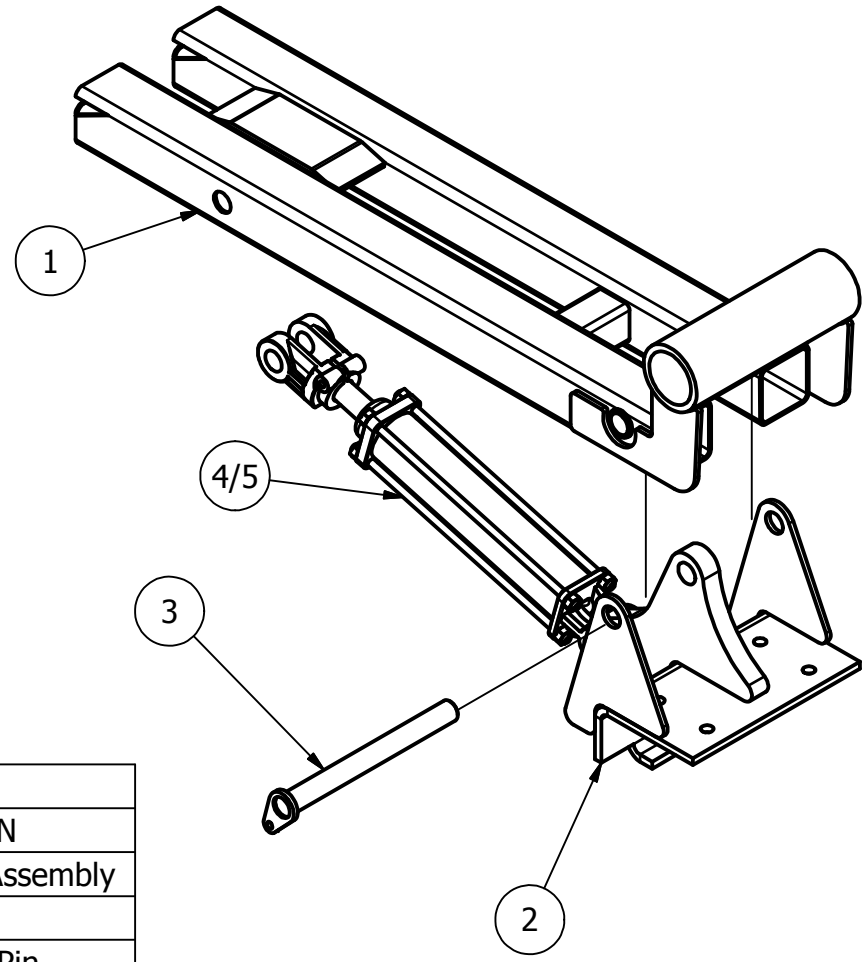

PARTS LIST			
ITEM	QTY	PART NUMBER	DESCRIPTION
1	1	8560A82	8500 1/4 Turn Arm Assembly
2	1	8560A83	8500 1/4-Turn Base
3	1	8560A85	8500 1/4-Turn Pivot Pin
4	1	1490-5145	LH 1/4-Turn Cylinder
5	1	1490-5146	RH 1/4-Turn Cylinder

Double Turn Cylinder
1490-6908
(3 X 22 X 1-1/2)

Back

Home

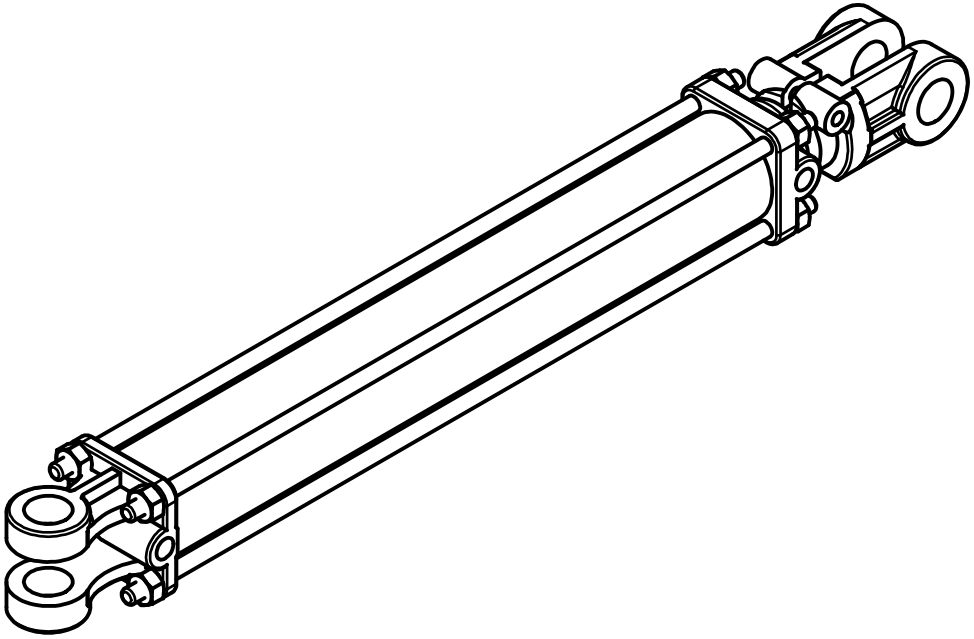

Use Seal Kit # 1490-6929

Squeeze Frontend

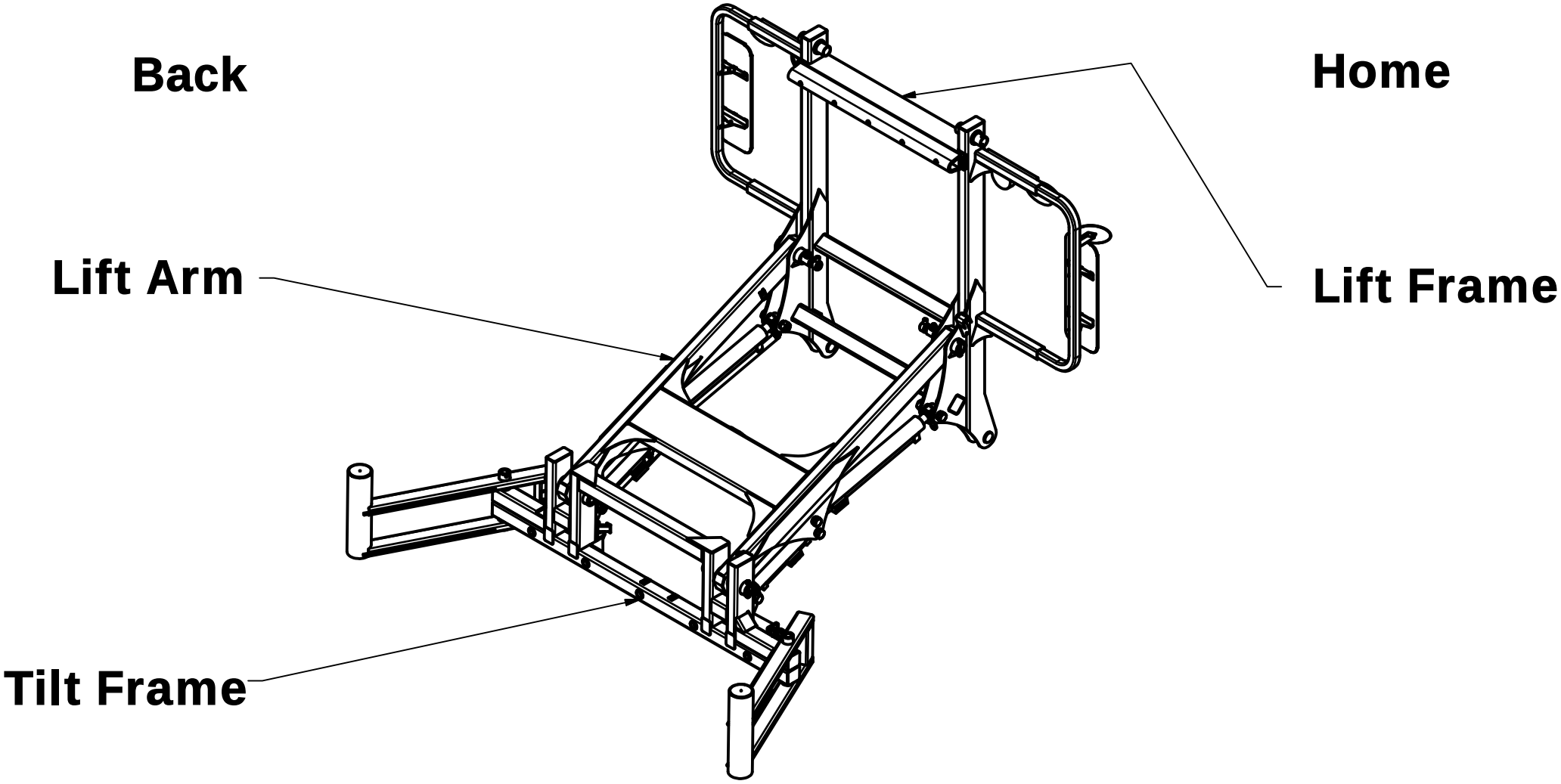

Lift Frame Assy

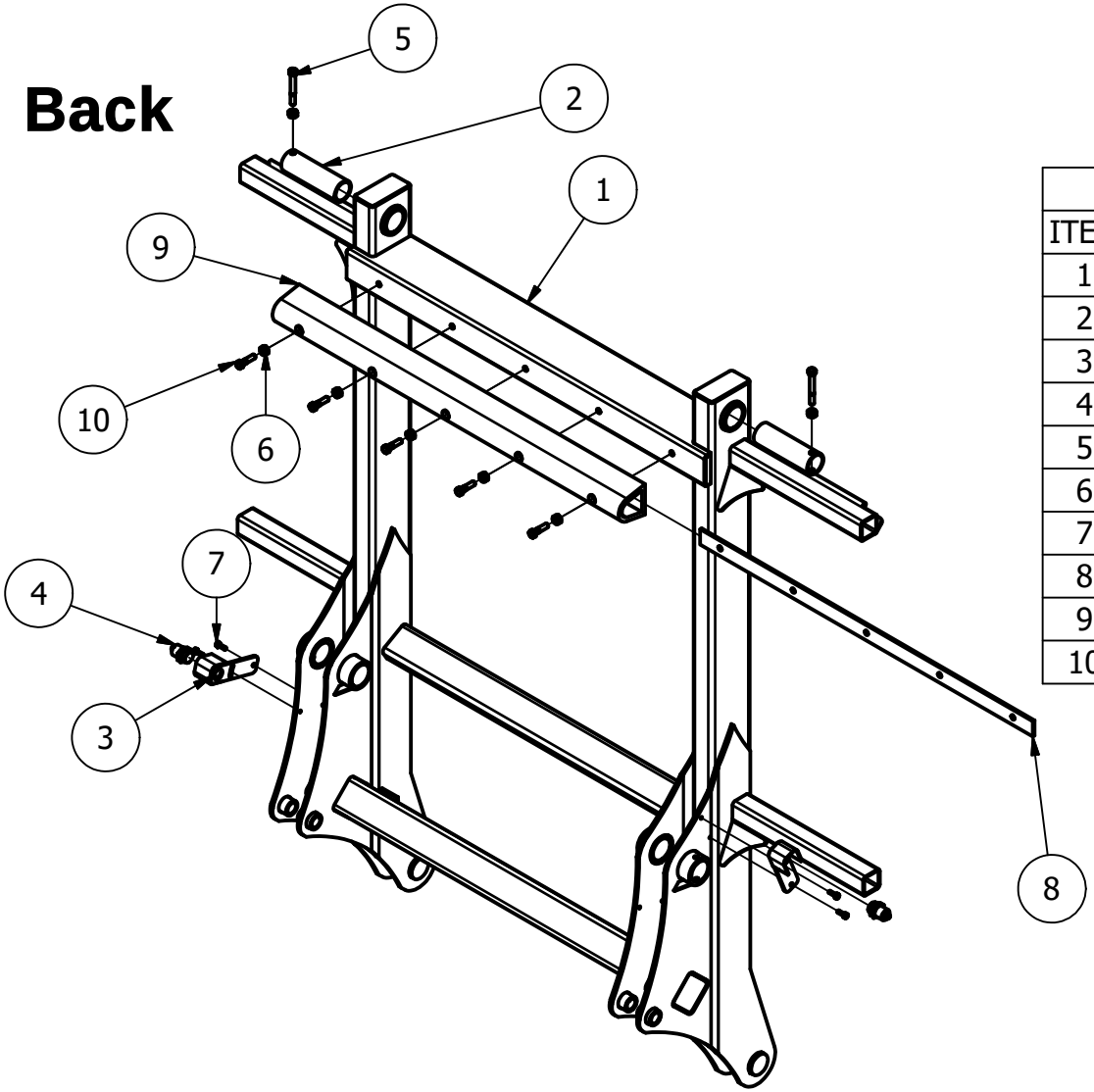

PARTS LIST			
ITEM	QTY	PART NUMBER	DESCRIPTION
1	1	5540A	Front Lift Frame
2	2	5540-118	Lift Frame Upper Pivot Shaft
3	2	1400-122	Shielded Prox Switch Mount
4	2	1490-5667	Prox Switch W/QD at switch
5	2	1/2-13 X 4	Hex Bolt
6	7	1/2-13 Nut	Hex Nut
7	4	5/16-18 X 1	Hex Bolt
8	1	5540-109	Rubber Bumper Strap
9	1	1490-5338	Rubber Bumper
10	5	1/2-13 X 2	Hex Bolt

Prox Wire 1490-5668

Lift Frame Assy

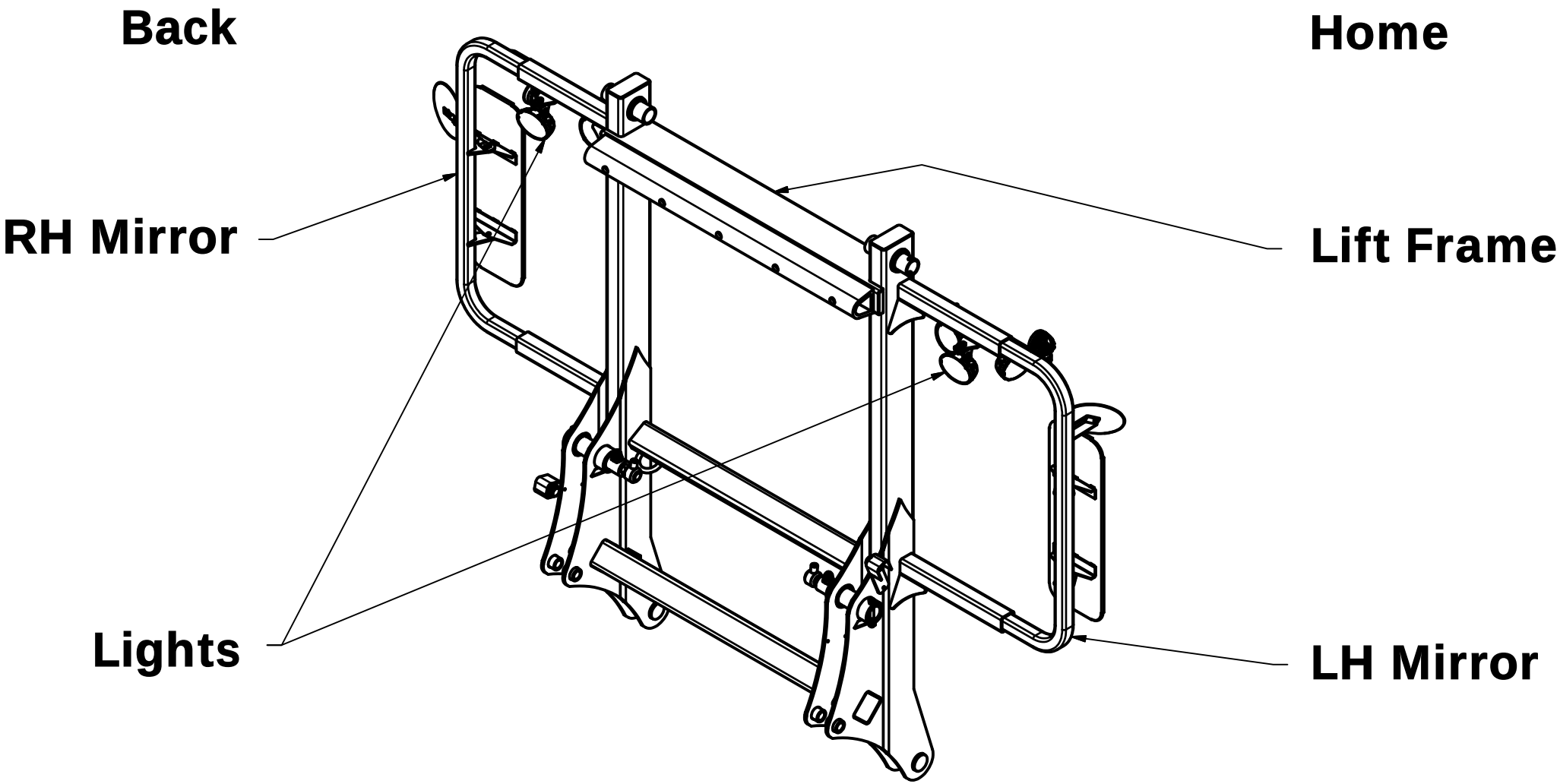

Lift Arm Assy

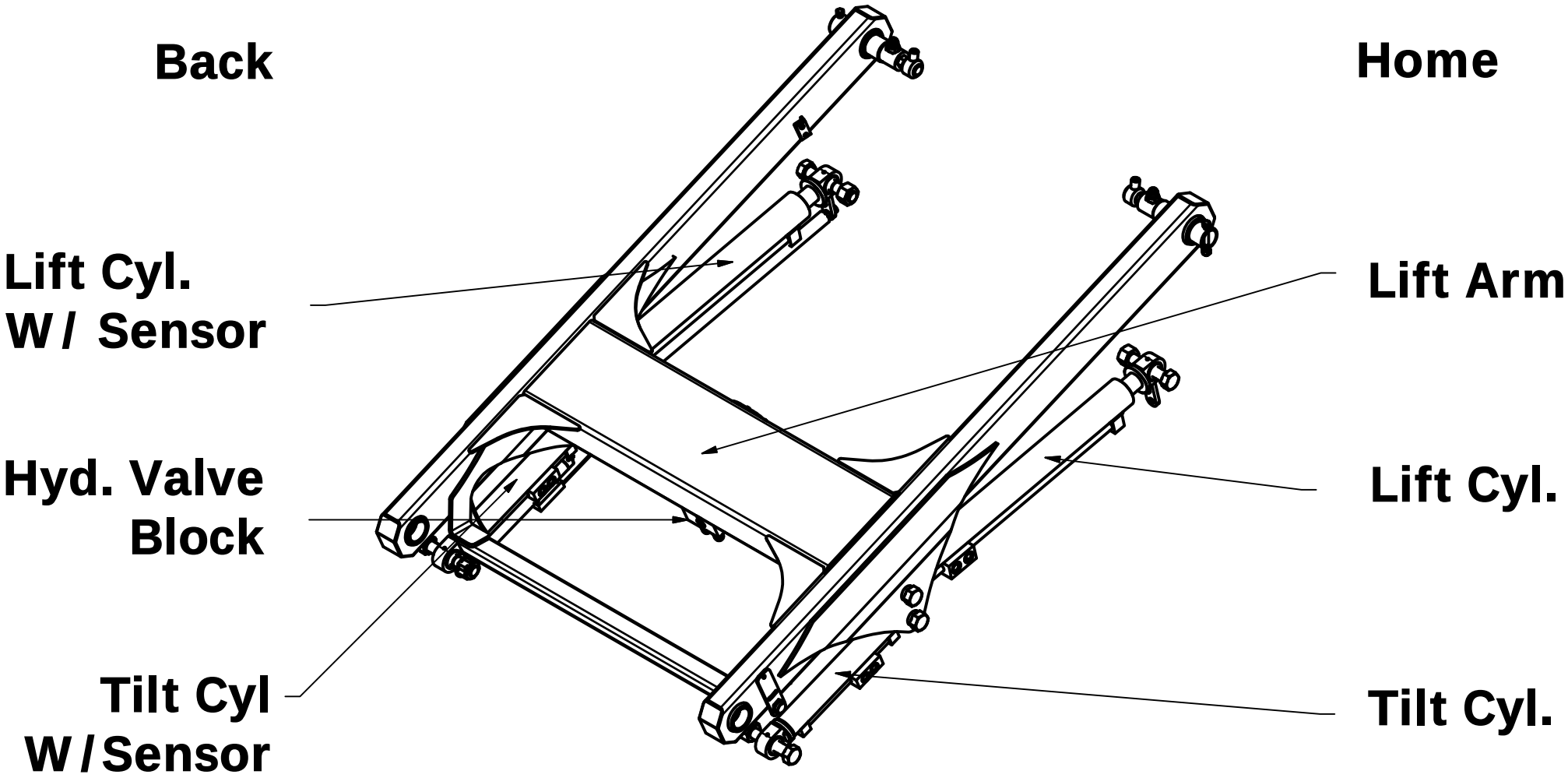

Squeeze Tilt Frame Assy

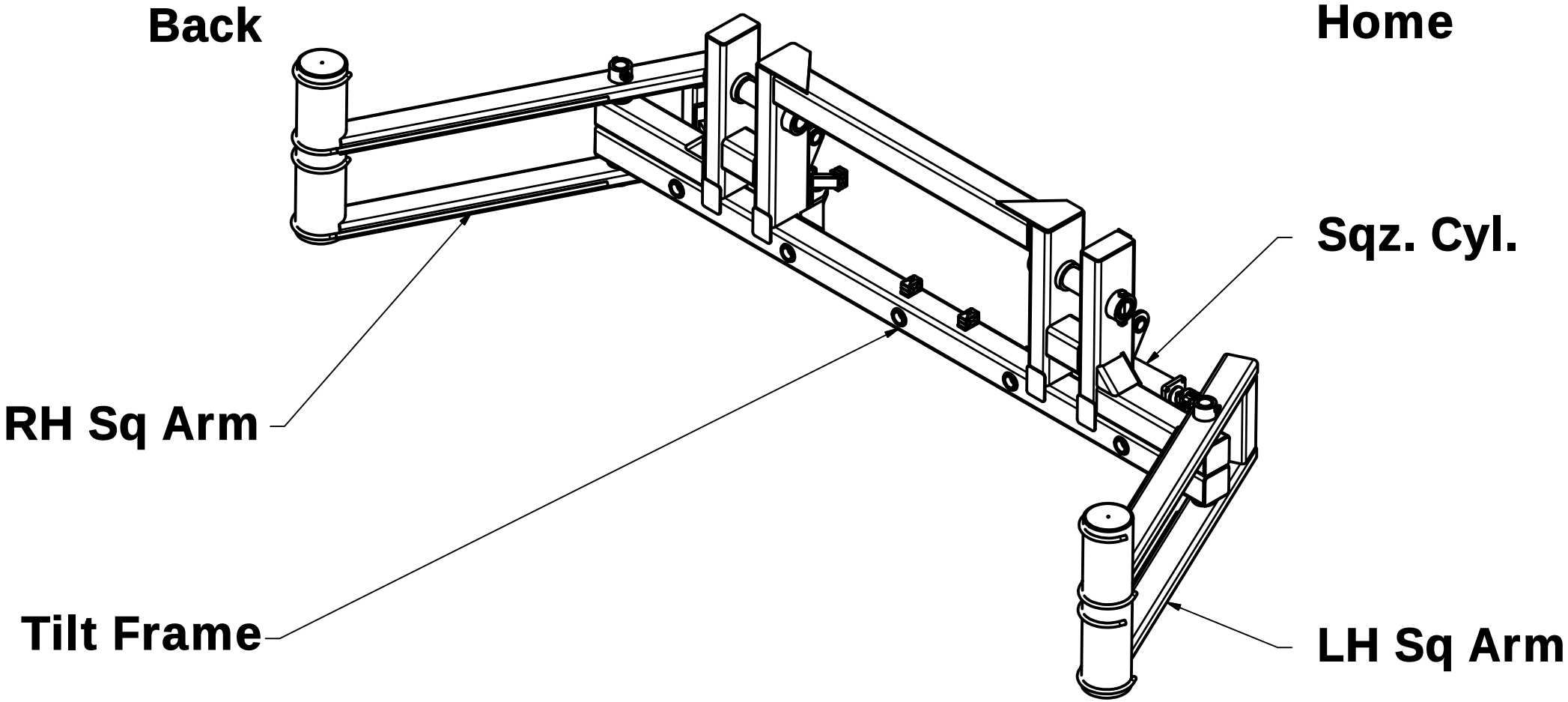

Lift Arm

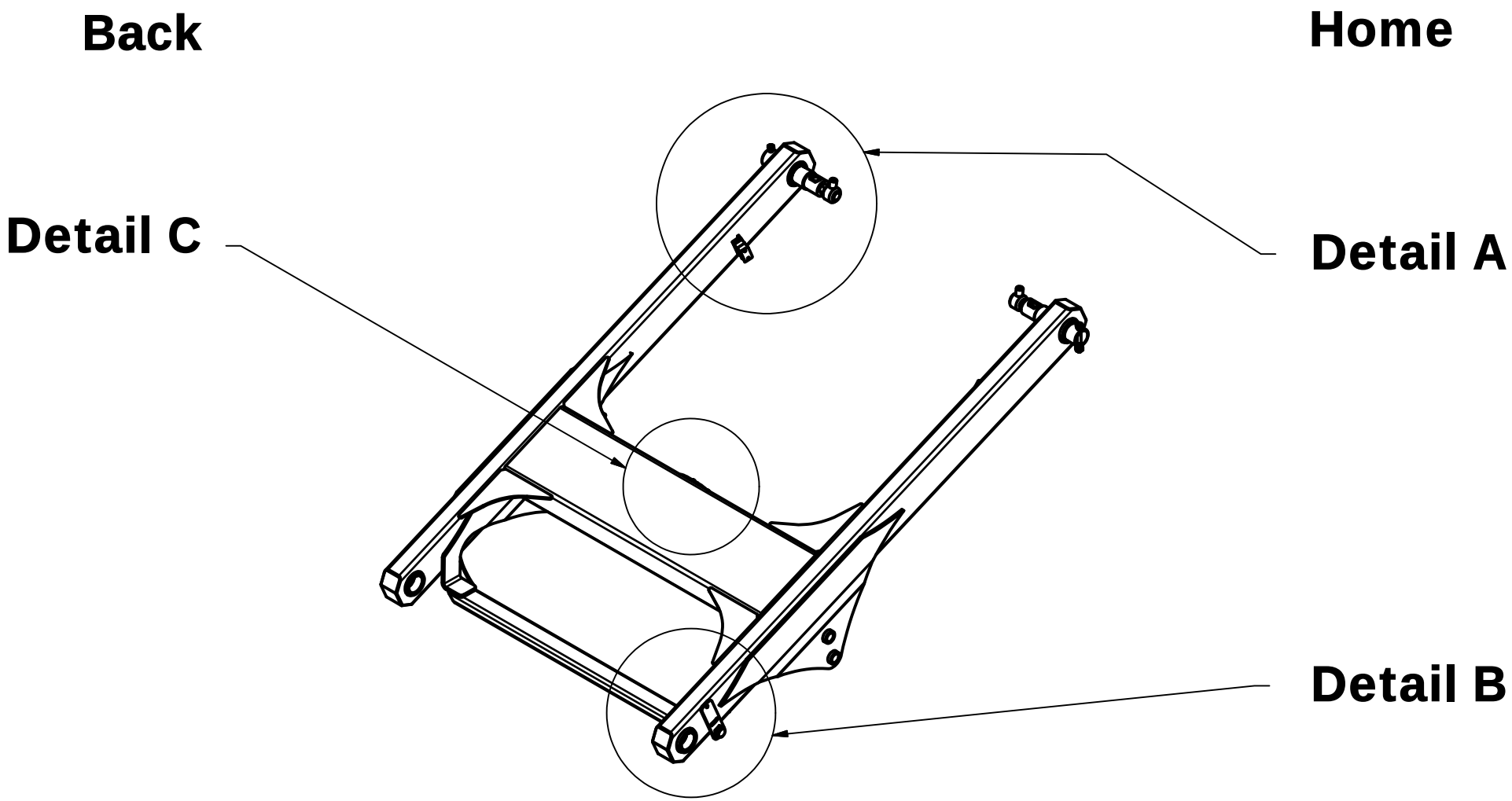

Lift Arm Detail B

Back **Home**

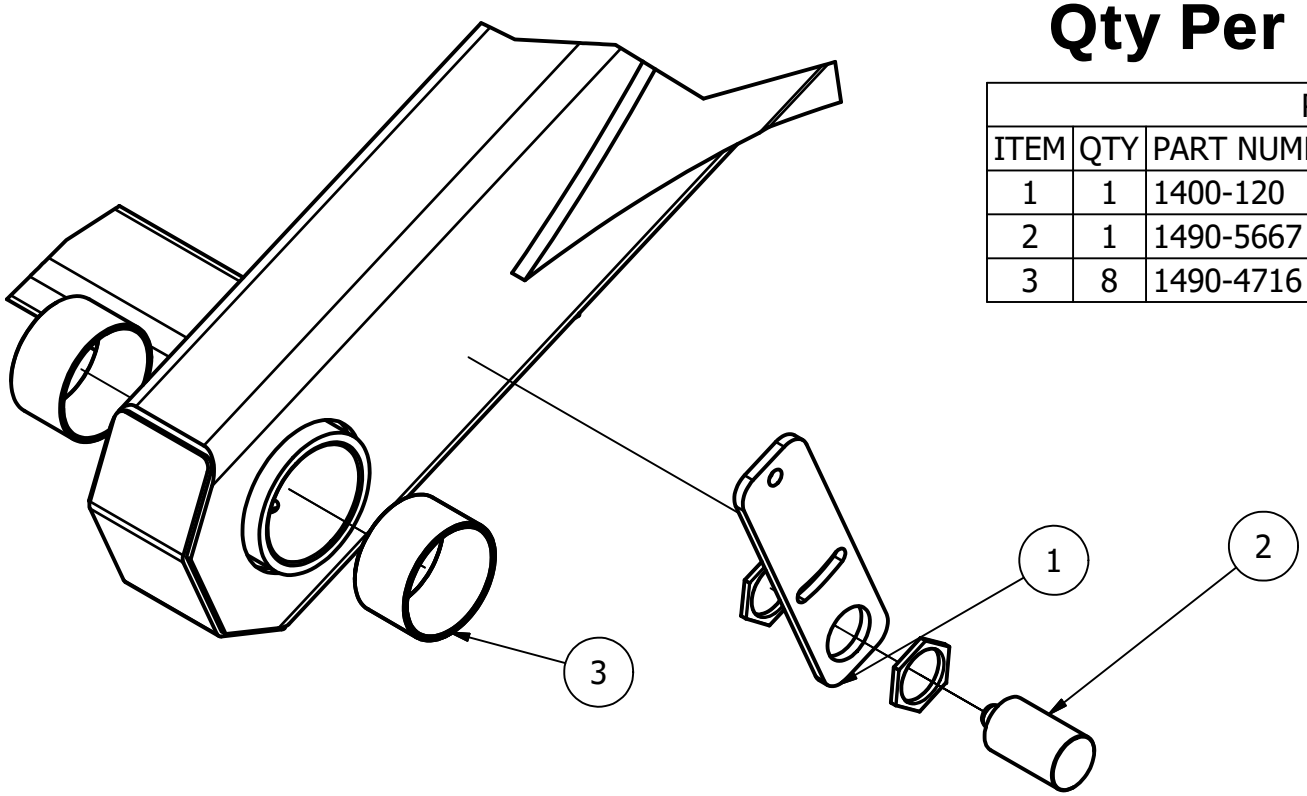

Qty Per Lift Arm Assy

PARTS LIST			
ITEM	QTY	PART NUMBER	DESCRIPTION
1	1	1400-120	Prox Switch Mount
2	1	1490-5667	Prox Switch W/QD at switch
3	8	1490-4716	Wear Bushing

Lift Arm Detail A

Back

Home

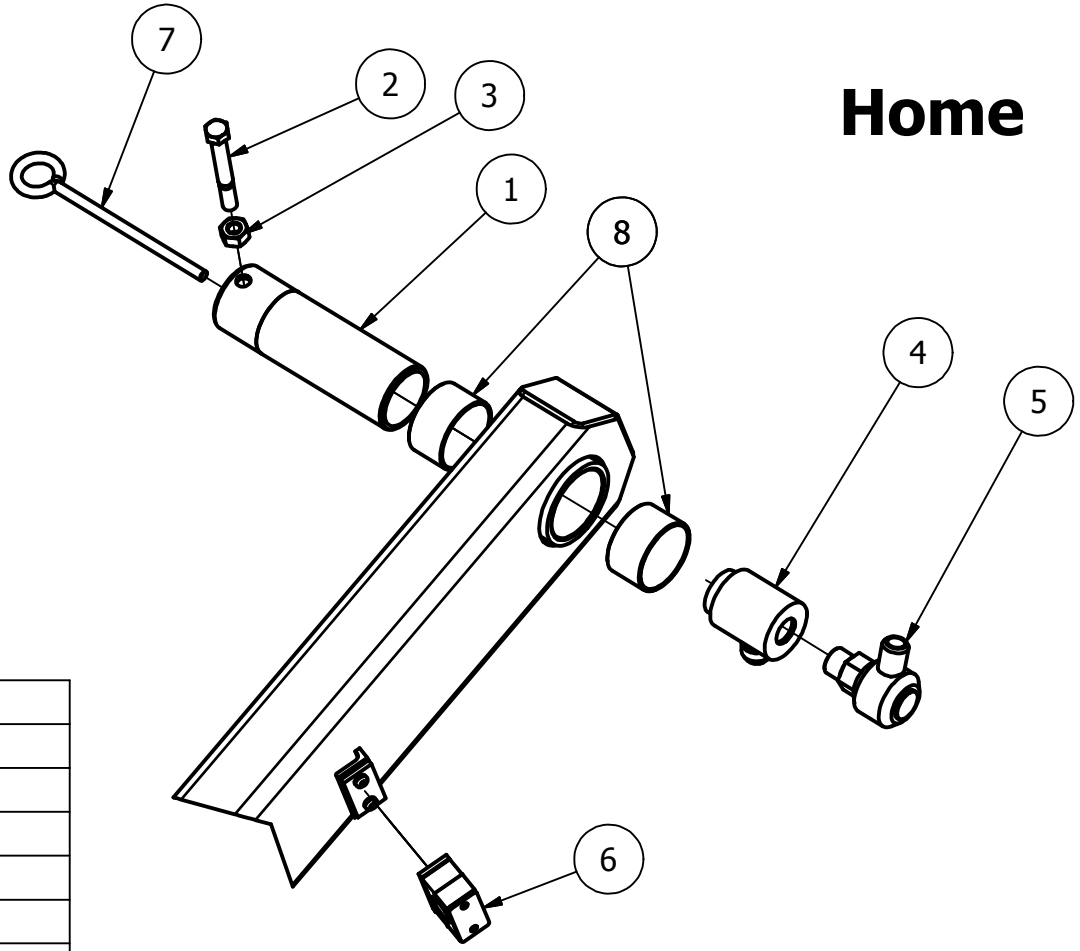

Qty Per Lift Arm Assy

PARTS LIST			
ITEM	QTY	PART NUMBER	DESCRIPTION
1	2	5540-111	Main Pivot Shaft
2	2	1/2-13 X 4"	Bolt
3	2	1/2-13 Nut	Nut
4	2	1490-5879	High Pressure Swivel Mount
5	2	1490-5849	High Pressure Swivel
6	4	Kit-Sng-.75	3/4" Single Hose Clamp
7	2	Eye bolt	3/8 X 8 Eye bolt
8	8	1490-4716	Wear Bushing

Lift Arm Detail C

Back **Home**

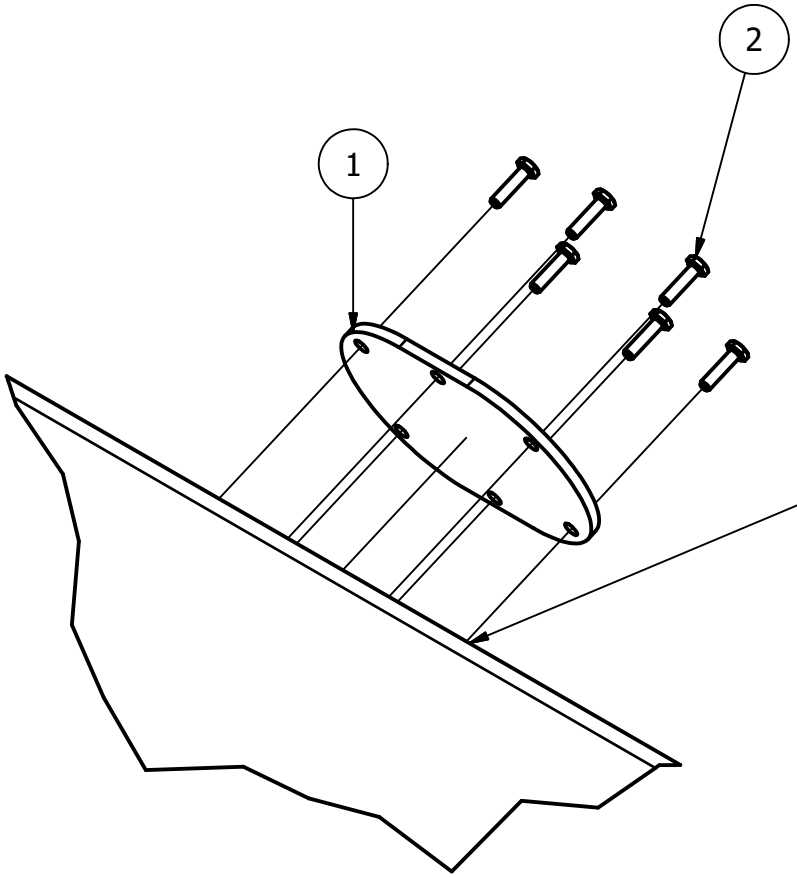

PARTS LIST			
ITEM	QTY	PART NUMBER	DESCRIPTION
1	1	5530-125	Lift Arm Crossmember Cover
2	6	1/4-20 X 1	1/4-20 X 1 Hex Head Bolt
3	1	5530-121	EVDR-6 Mounting Plate
4	1	1490-5861	EVDR-6 Controler
5	1	1490-5887	Frontend Wiring Harness

Inside the Crosstube

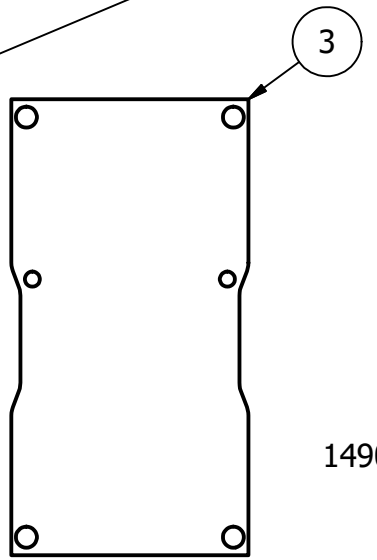

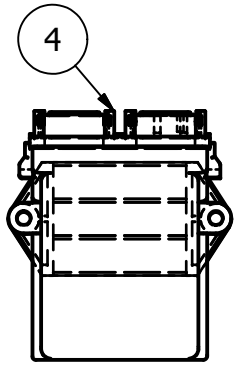

1490-5887 Front Wiring Harness includes
Valve and Cylinder Sensor Wires

Tilt Squeeze Cylinder Assy

(2-1/2 X 6 X 1-1/8" Cylinder)

Back

Home

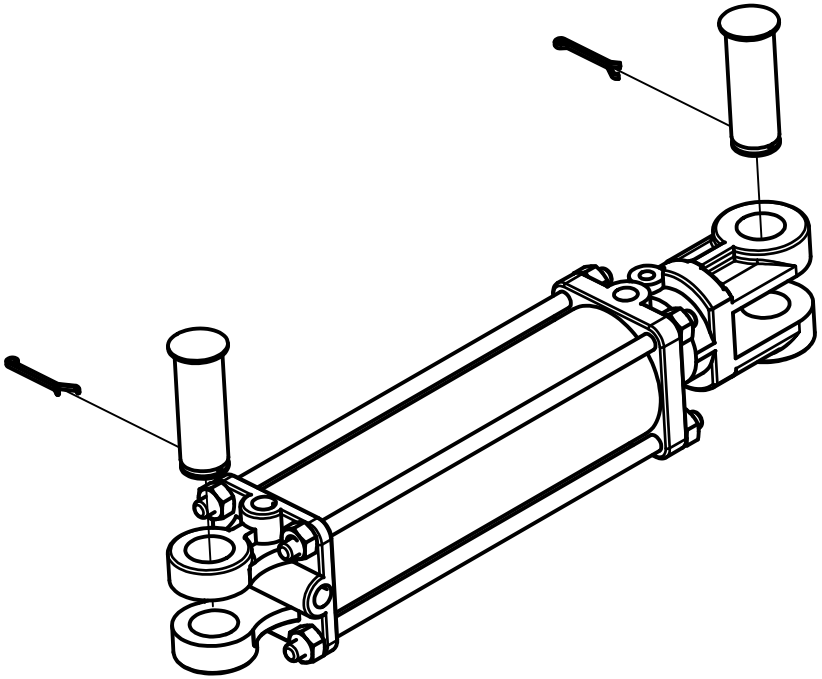

Cylinder Part Number
14905147
(Comes with both Cylinder pins)

Seal Kit Part Number
14901872
(2-1/2" bore, 6" Stroke, 1-1/8" Rod)

Rod End Clevis Part Number
14905958
(Hardened for 1" Cylinder pins 1-1/8" Thread)

Cylinder Pin Part Number
14904566
(1 X 2-3/4" W/Cotter pin)

RH Front Squeeze Arm Assy

Back **Home**

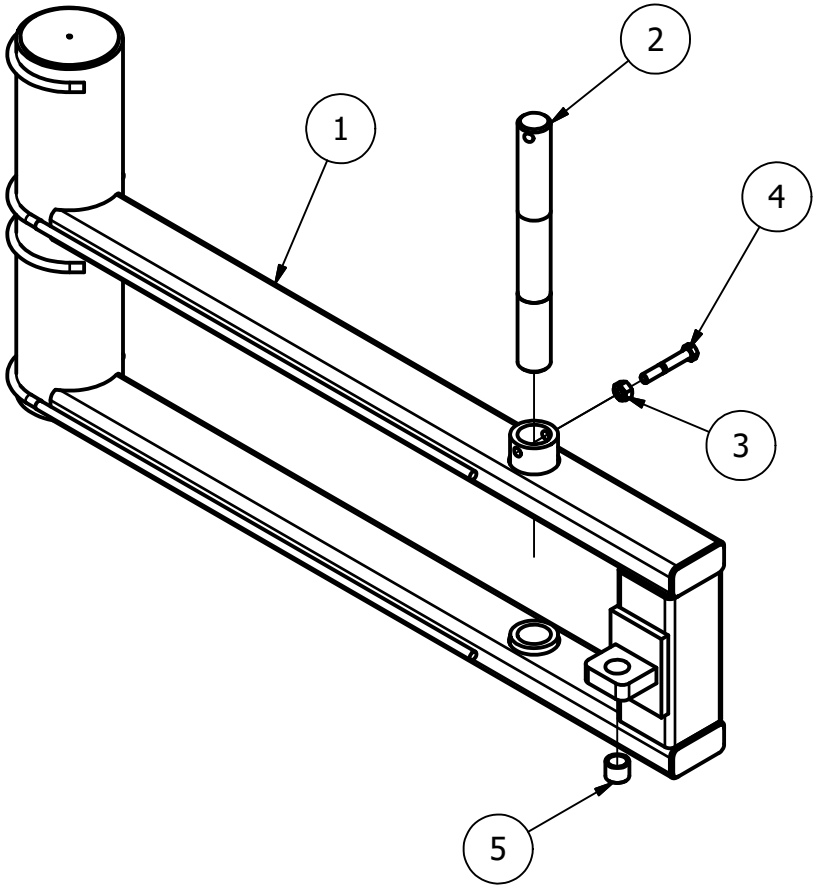

PARTS LIST			
ITEM	QTY	PART NUMBER	DESCRIPTION
1	1	1425A2R	RH Squeeze Arm
2	1	1420-305	Machined Shaft
3	1	1/2-13 Nut	Hex Nut
4	1	1/2-13 X 3-1/4 Bolt	Hex Bolt
5	1	14902030	Wear Bushing

LH Front Squeeze Arm Assy

Back **Home**

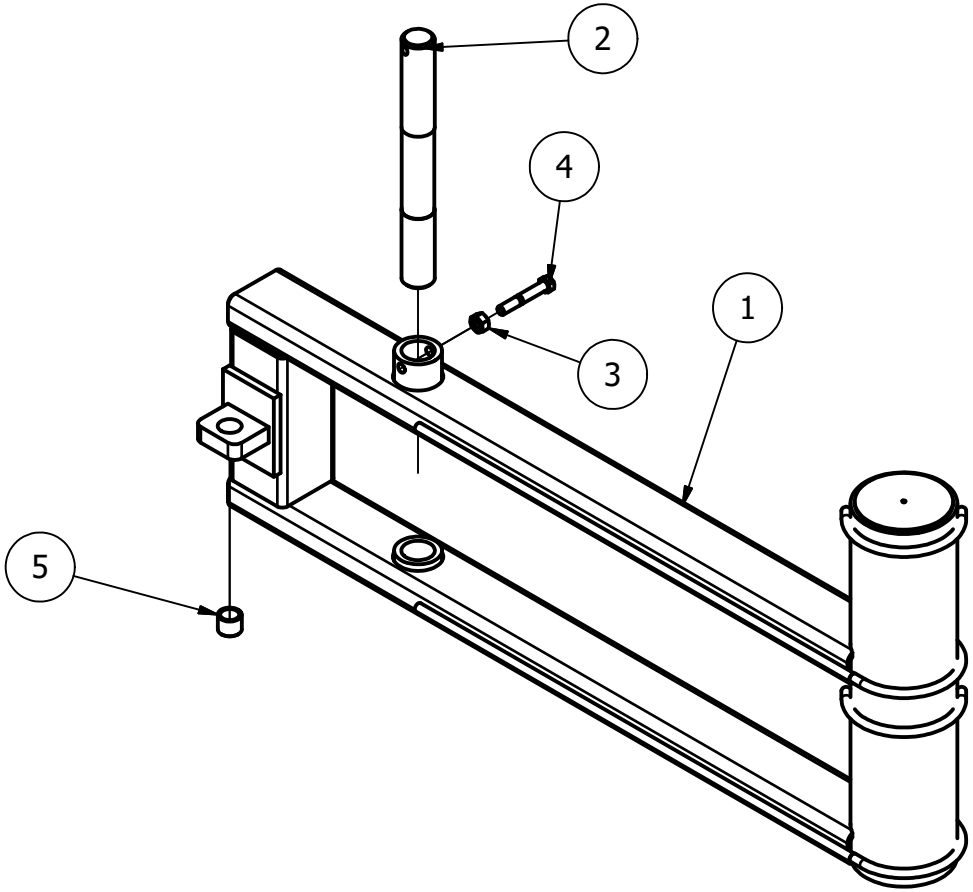

PARTS LIST			
ITEM	QTY	PART NUMBER	DESCRIPTION
1	1	1425A2L	RH Squeeze Arm
2	1	1420-305	Machined Shaft
3	1	1/2-13 Nut	Hex Nut
4	1	1/2-13 X 3-1/4 Bolt	Hex Bolt
5	1	14902030	Wear Bushing

Squeeze Front Tilt Frame Assy

Back **Home**

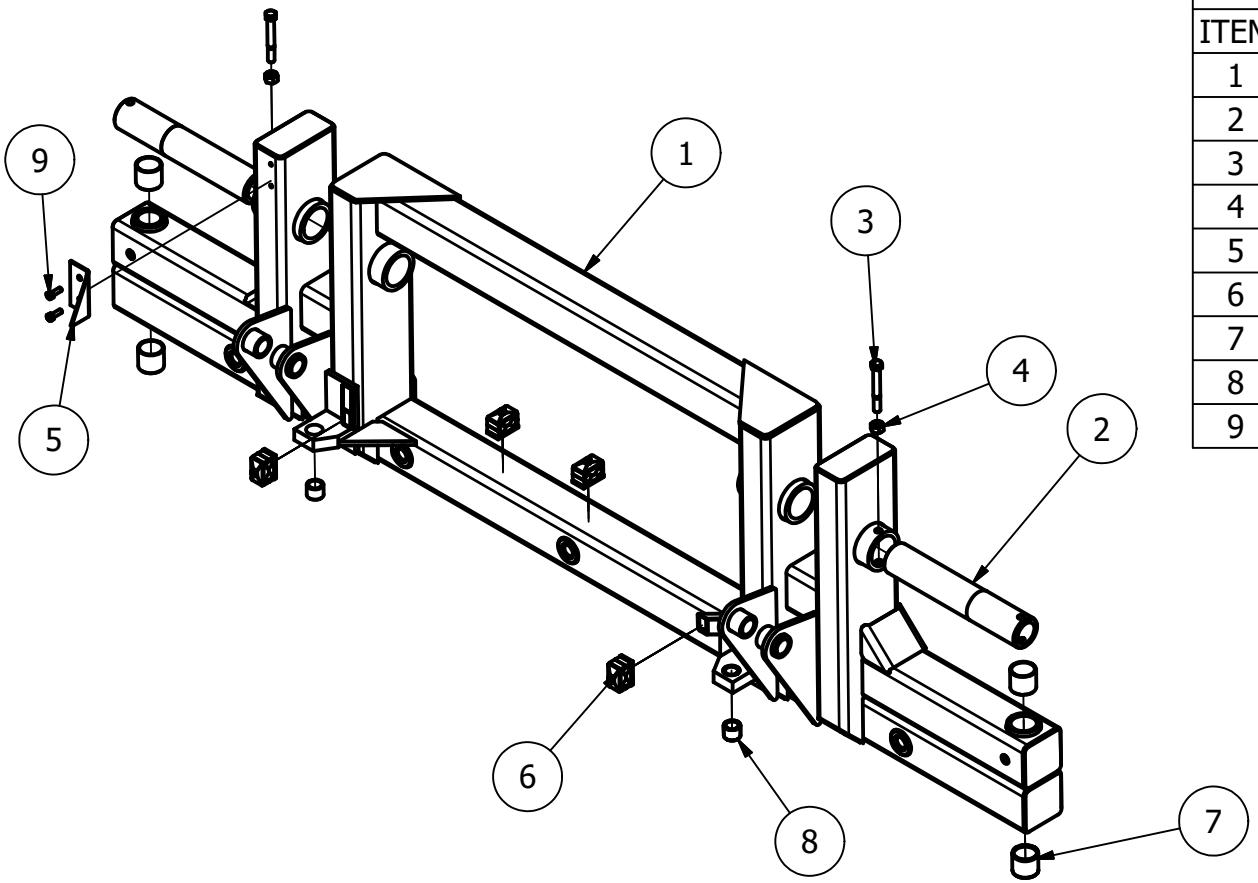

PARTS LIST			
ITEM	QTY	PART NUMBER	DESCRIPTION
1	1	5525A	Front Squeeze Tilt Frame
2	2	5520-110	Tilt Pivot Shaft
3	2	1/2-13 X 4	Hex Bolt
4	2	1/2-13 Nut	Hex Nut
5	1	5520-200	Tilt Prox Adjustent Angle
6	4	KIT-DBL-.375	3/8" Double Hose Clamp
7	4	14904654	Wear Bushing
8	2	14902030	Wear Bushing
9	2	5/16-18 X 1	Hex Bolt

Stinger 8500 Stacker

Working Lights

The two Oval Trilliant lights look identical in appearence except for a Blue Ring along the outer edge of the lens on the 2500 lumen (Forward Facing) light.

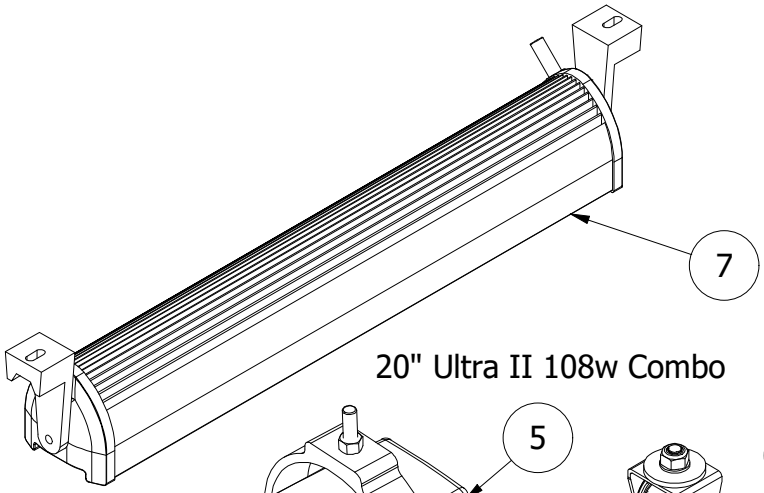

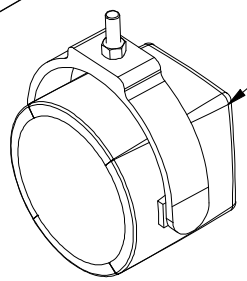

Upper Lights

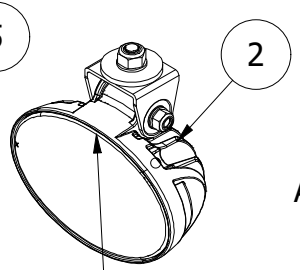

2500 Lumen
Blue Ring

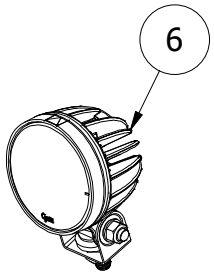

Add-On $\frac{1}{4}$ Turn Light

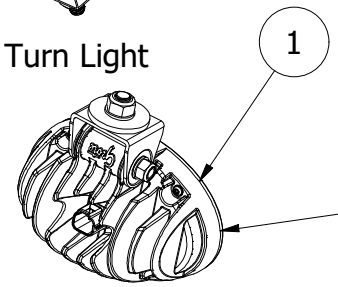

Rear-Facing 1/4-Turn
& Squeeze-Rail Lights
1200 Lumen (No Blue Ring)

1490-6690 Wire Harness required to add any LED light to an older machine

Wiring Harnesses

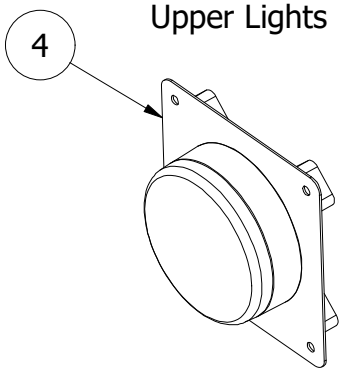

Hi Beam Bulb
1490-6616

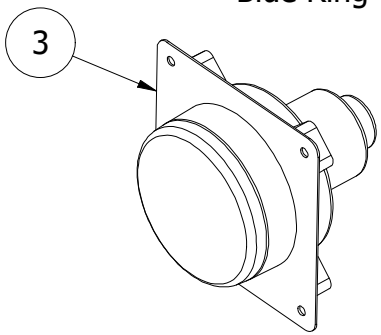

Bumper Lights

Low Beam Bulb
1490-6617

PARTS LIST			
ITEM	QTY	PART NUMBER	DESCRIPTION
1	6	1490-6319	Trilliant LED Oval 1200 Lumens Flood Light
2	2	1490-6320	Trilliant LED Oval 2500 Lumens Flood Light
3	2	1490-6557	Low Beam Headlight (2014 & Later Outer)
4	2	1490-6558	Hi Beam Headlight (2014 & Later Inner)
5	2	14906770	Rallye 4000Xi Xenon Driving Lamp
6	1	1490-6611	Trilliant T26 LED 1400 Flood Light
7	2	1490-7048	20" Ultra II 108w Combo

Wiring Harnesses

Not Drawn to Scale

Back **Home**

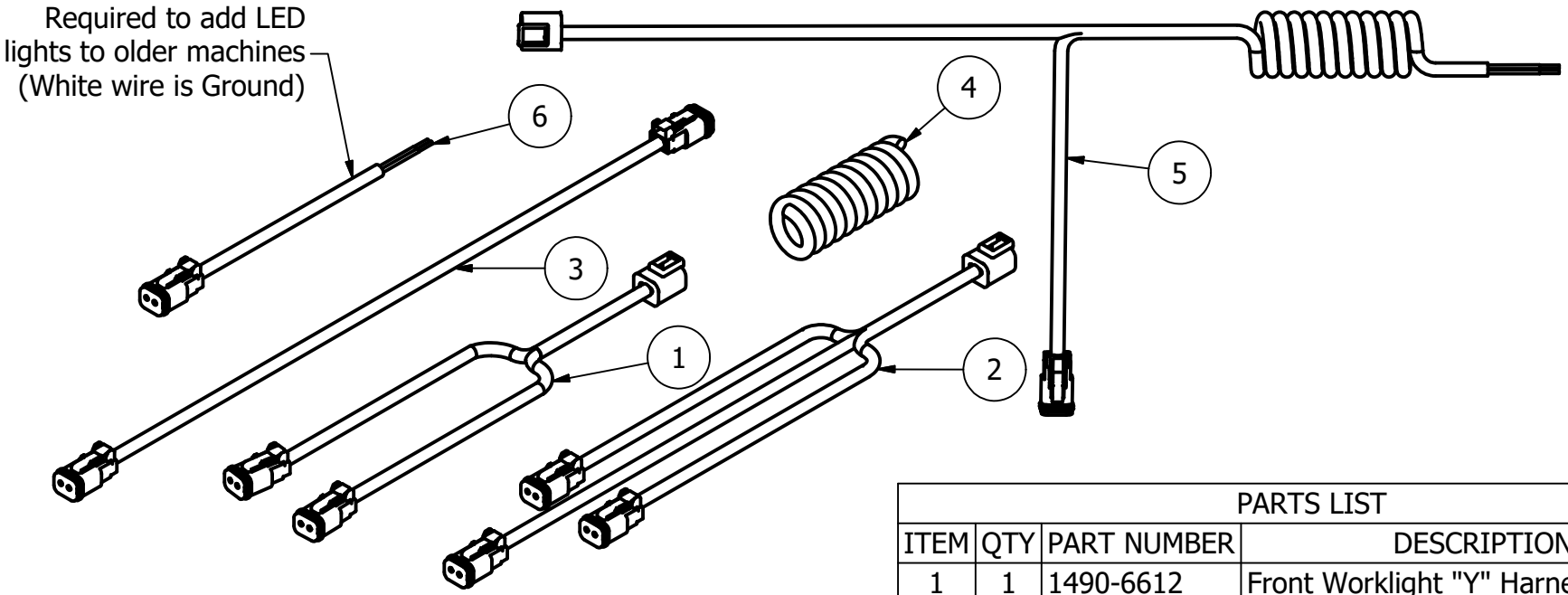

PARTS LIST			
ITEM	QTY	PART NUMBER	DESCRIPTION
1	1	1490-6612	Front Worklight "Y" Harness (LH)
2	1	1490-6613	Front Worklight "W" Harness (RH)
3	1	1490-6689	Squeeze Rail Wiring Harness (Long)
4	1	1490-5955	Rear Work Light Power Supply Cord
5	1	1490-6691	Squeeze Rail Wire Harness Assembly
6	1	1490-6690	Rear Work Light Power Supply Cord

LED Turn/Brake Lights

Back **Home**

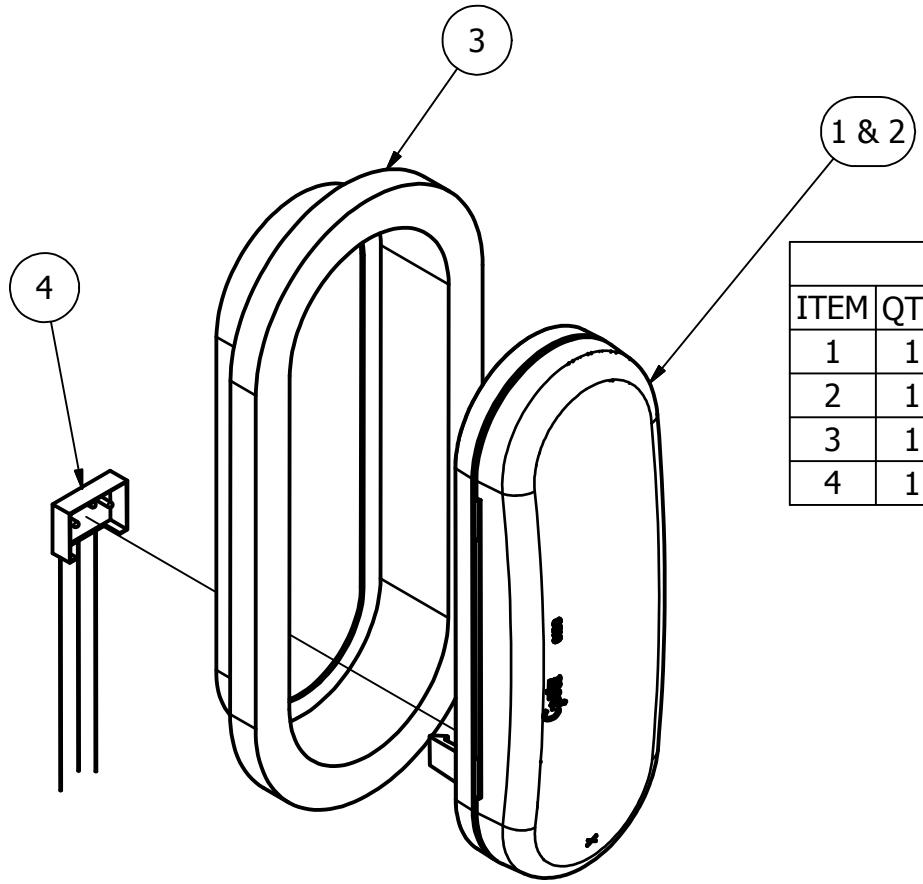

PARTS LIST			
ITEM	QTY	PART NUMBER	DESCRIPTION
1	1	1490-6188	Red LED Turn/Brake Light
2	1	1490-6189	Amber LED Turn Signal Light
3	1	1490-6265	Rubber Grommet for Tail lights
4	1	1490-6266	3-Pin Pigtail

Compartment Light Detail

Back **Home**

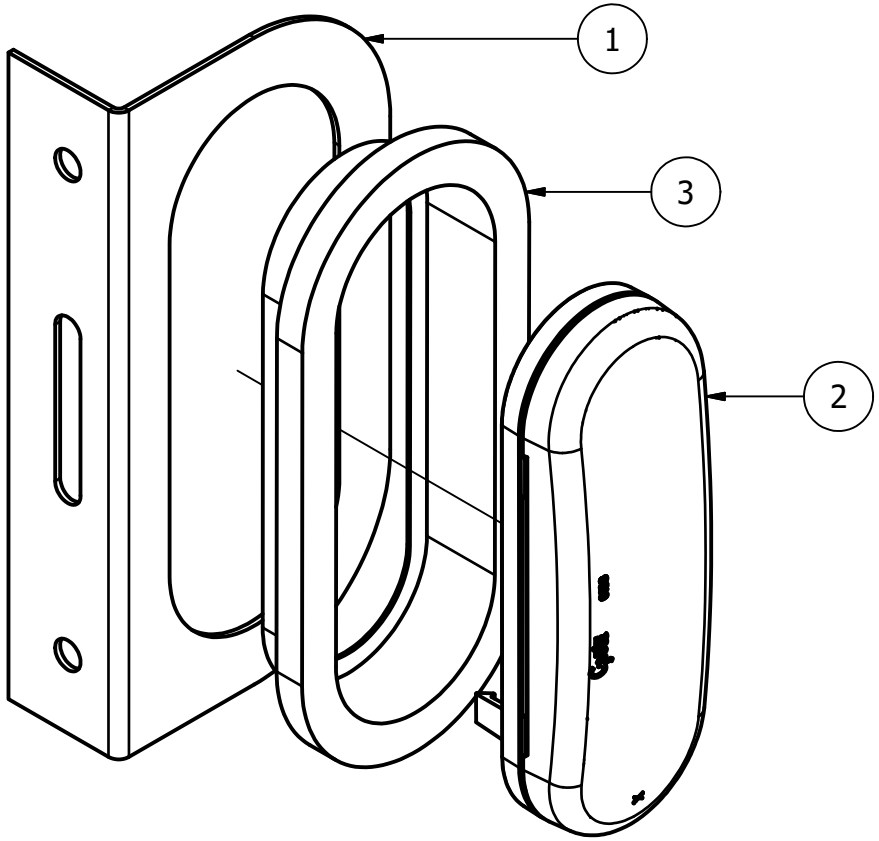

PARTS LIST			
ITEM	QTY	PART NUMBER	DESCRIPTION
1	1	1490-3502	Black Steel Oval Light Bracket
2	1	1490-6321	Oval 6" LED Dome Compartment Light
3	1	1490-6265	Rubber Grommet for Tail lights

LH Mirror Bracket

Back

Home

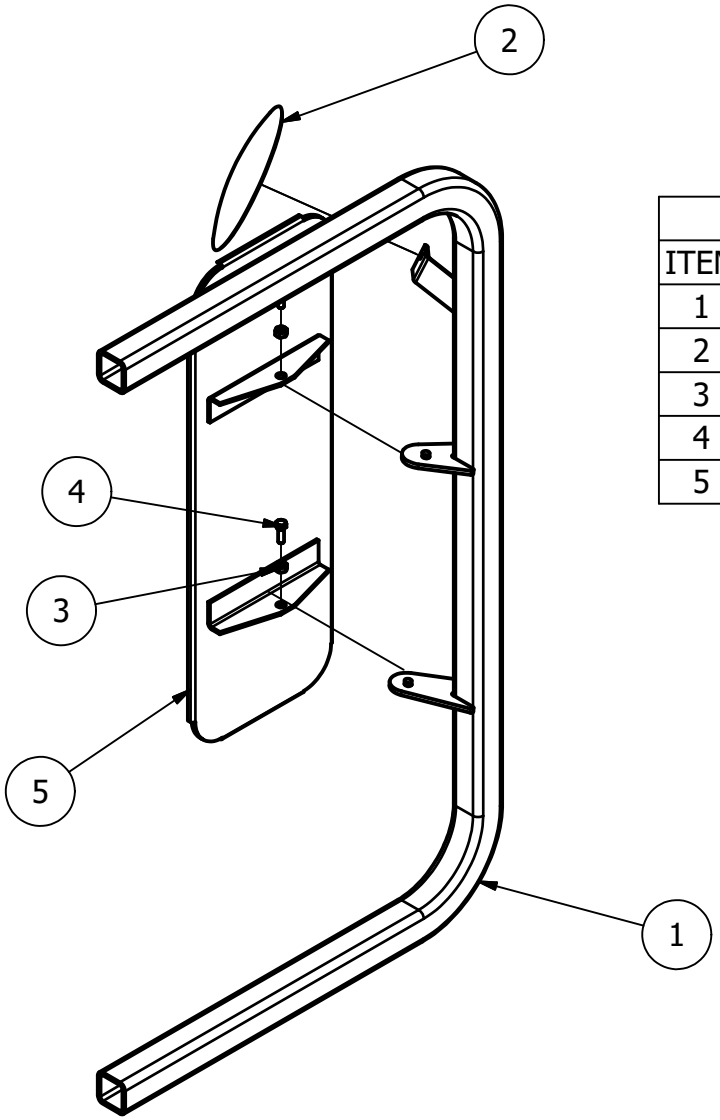

PARTS LIST			
ITEM	QTY	PART NUMBER	DESCRIPTION
1	1	2006A3L	2006 500 Series LH Mirror Bracket
2	1	1490-5087	8" Rd Convex Mirror
3	2	5/16 - 18	Hex Nut
4	2	5/16-18 X 1	Hex Bolt
5	1	1490-5379	10X30 Mirror Assy

RH Mirror Bracket

Back **Home**

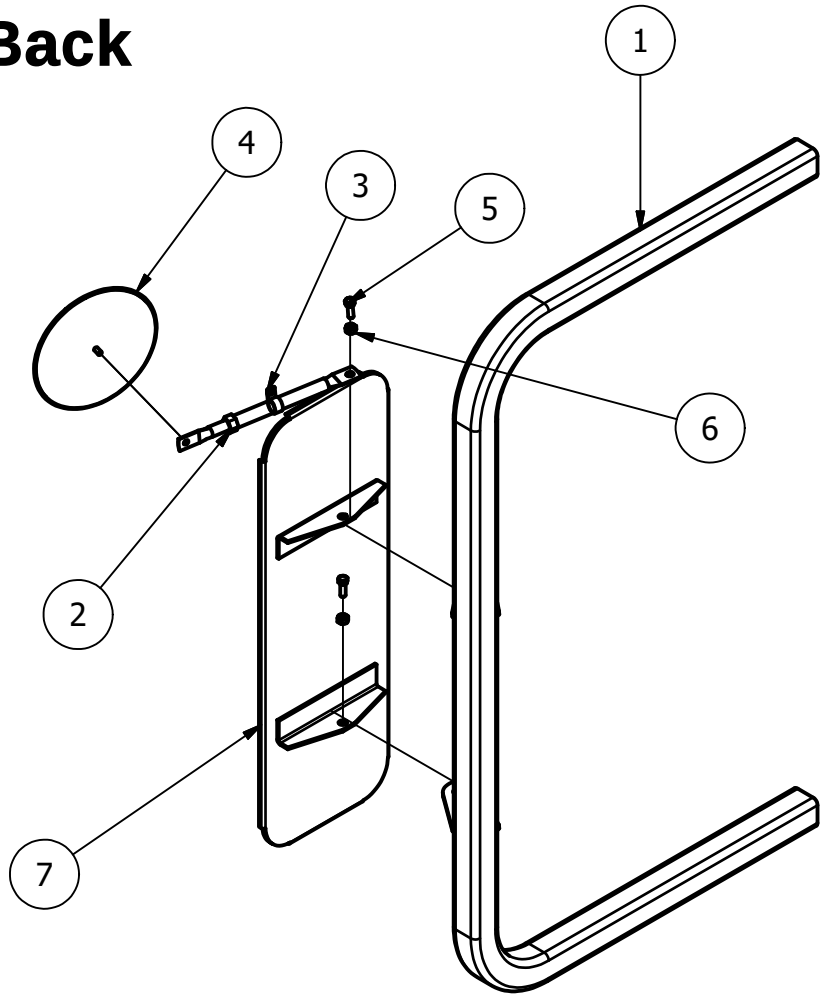

PARTS LIST			
ITEM	QTY	PART NUMBER	DESCRIPTION
1	1	2006A3R	2006 500 Series RH Mirror Bracket
2	1	1490-6564	Mirror Ext. Arm
3	1	Waytek #25512	3/4" Vinyl coated Cable Clamp
4	1	1490-5087	8" Rd Convex Mirror
5	2	5/16-18 X 1	Hex Bolt
6	2	5/16 - 18	Hex Nut
7	1	1490-5379	10X30 Mirror Assy

5530-204RH

(5530-204 W/Sensor)

Back **Home**

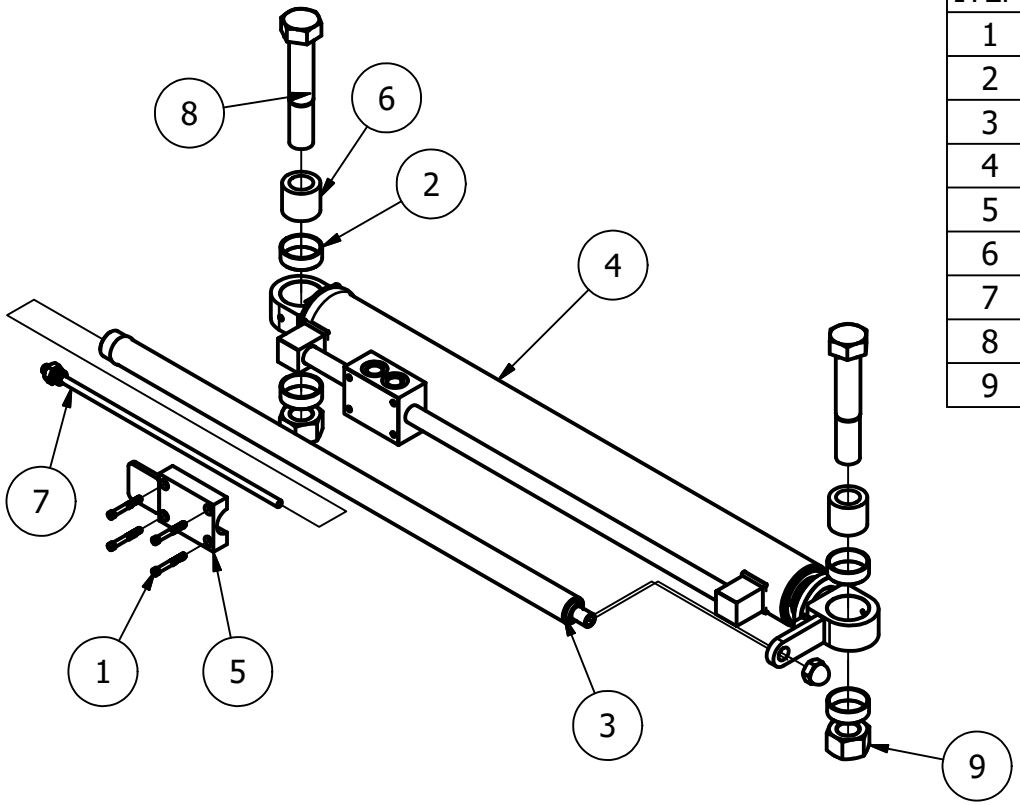

PARTS LIST			
ITEM	QTY	PART NUMBER	DESCRIPTION
1	4	Cap Screw	1/4 X 2-1/4 Allen Head Cap Screw
2	4	14905878	Wear Bushing
3	1	1490-5853	30" Sensor Housing
4	1	5530-204	3 X 30 X 2 Welded Cylinder
5	1	5530206	Position Sensor Mounting Cap Weldment
6	2	5530-130	Cylinder Pivot Bearing
7	1	1490-5867	13" Sensor
8	2	14905104	HCS 1-1/4 - 12 x 7, Zinc Plate Grade 8
9	2	14902081	Top Lock 1-1/4 - 12, Zinc Plate Grade 8

Cylinder Seal Kit 1490-5019

Sensor Housing Seal Kit 1490-6297

Sensor requires 1 - 8MB O-Ring

Acorn Nut for Sensor Houseing 1490-6624

5530-205RH

(5530-205 W/Sensor)

Back **Home**

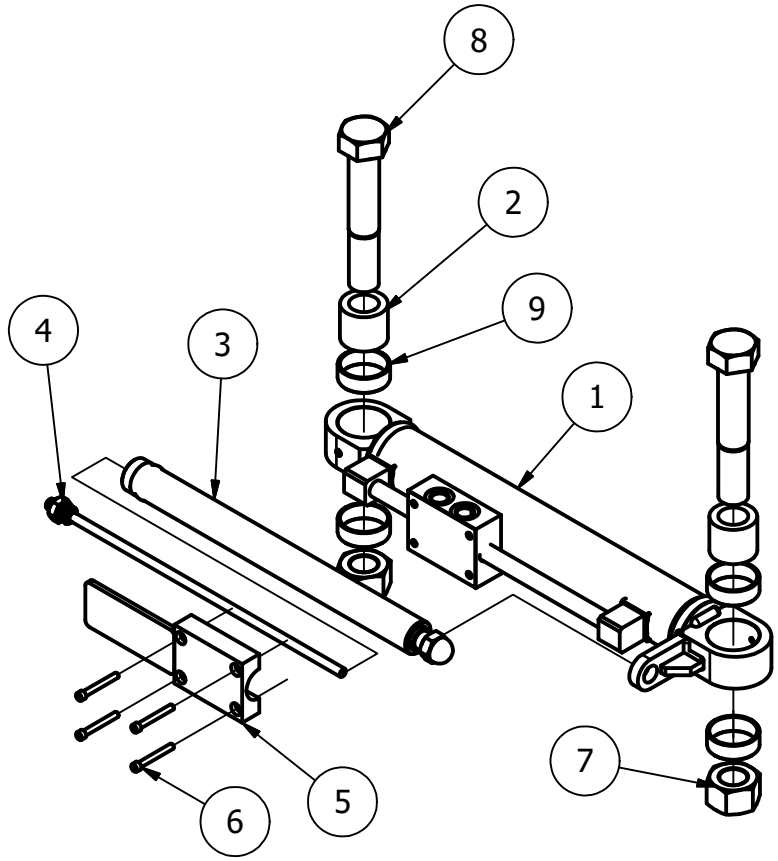

PARTS LIST			
ITEM	QTY	PART NUMBER	DESCRIPTION
1	1	5530-205	2-1/4 X 13 Tilt Cylinder
2	2	5530-130	Cylinder Pivot Bearing
3	1	1490-5854	13" Sensor Housing
4	1	1490-5866	13" Sensor
5	1	5530207	Position Sensor Mounting Cap Weldment
6	4	Cap Screw	1/4 X 2-1/4 Cap Screw
7	2	14902081	Top Lock 1-1/4 - 12, Zinc Plate Grade 8
8	2	14905104	HCS 1-1/4 - 12 x 7, Zinc Plate Grade 8
9	4	1490-5878	Wear Bushing

Cylinder Seal Kit 1490-4756

Sensor Housing Seal Kit 1490-6297

Sensor requires 1 - 8MB O-Ring

Acorn Nut for Sensor Houseing 1490-6624

5530-205

Back **Home**

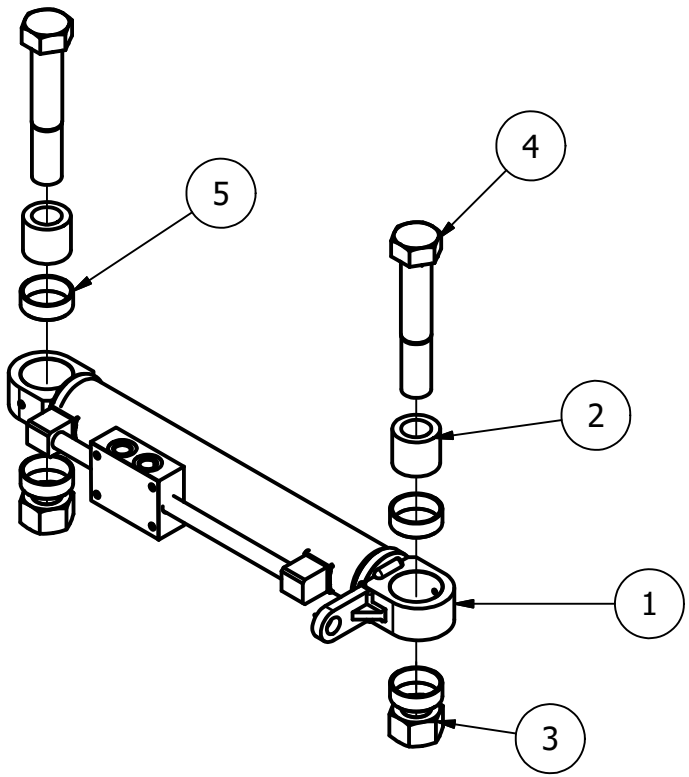

PARTS LIST			
ITEM	QTY	PART NUMBER	DESCRIPTION
1	1	5530-205	2-1/4 X 13 Tilt Cylinder
2	2	5530-130	Cylinder Pivot Bearing
3	2	14902081	Top Lock 1-1/4 - 12, Zinc Plate Grade 8
4	2	14905104	HCS 1-1/4 - 12 x 7, Zinc Plate Grade 8
5	4	1490-5878	Wear Bushing

Cylinder Seal Kit 1490-4756

Stackdown Cylinder
1490-1896
(3 X 10 X 1-1/2)

Back

Home

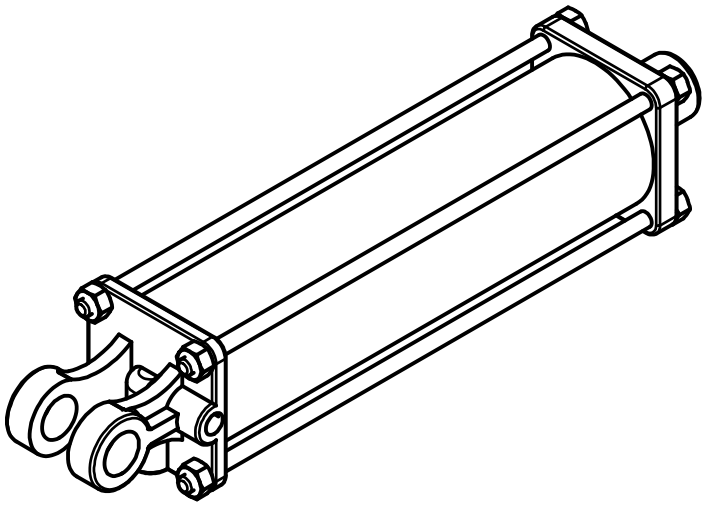

Use seal Kit #1490-2517

5530-204

Back

Home

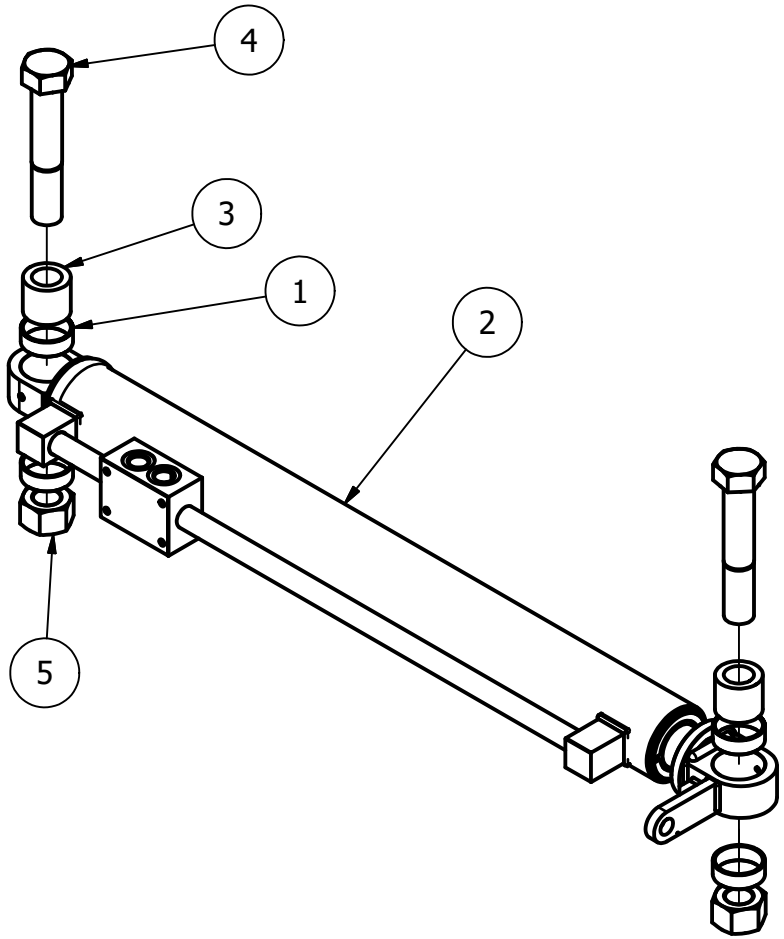

PARTS LIST			
ITEM	QTY	PART NUMBER	DESCRIPTION
1	4	1490-5878	Wear Bushing
2	1	5530204	3 X 30 X 2 Welded Cylinder
3	2	5530-130	Cylinder Pivot Bearing
4	2	14905104	HCS 1-1/4 - 12 x 7, Zinc Plate Grade 8
5	2	14902081	Top Lock 1-1/4 - 12, Zinc Plate Grade 8

Cylinder Seal Kit 1490-5019

Hoist Cylinder
1490-6921
(5 X 50 X 2.50)

Back

Home

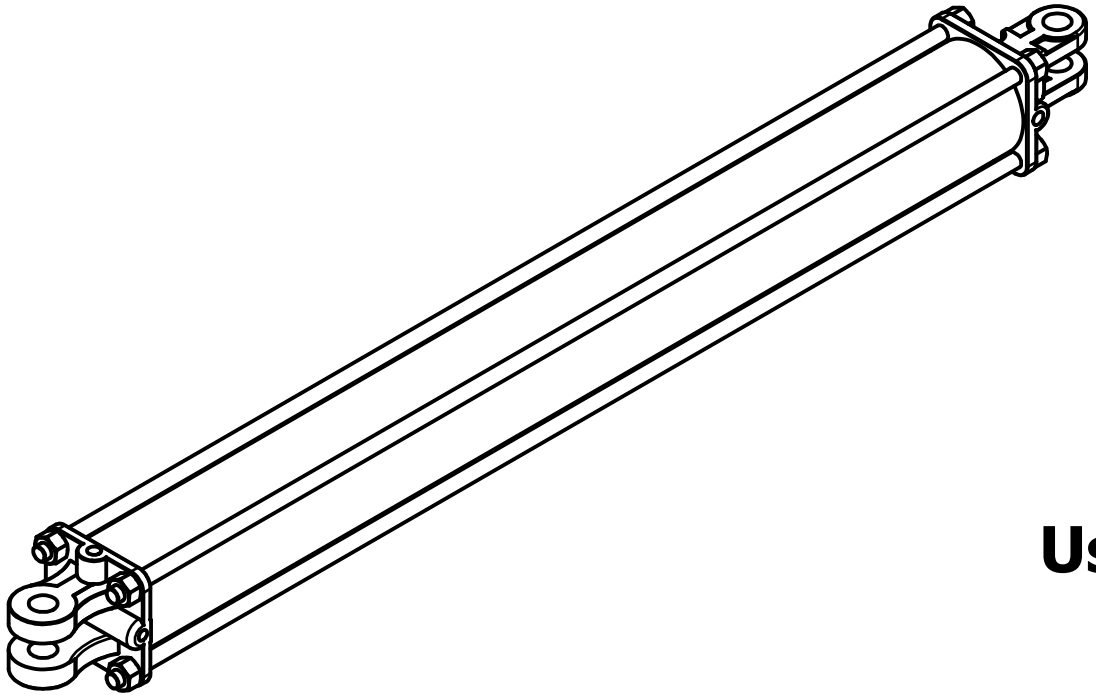

Use Seal Kit # 1490-7103

Pull-Bar Cylinder
1490-6922
(3 X 52 X 1-1/2)

Back

Home

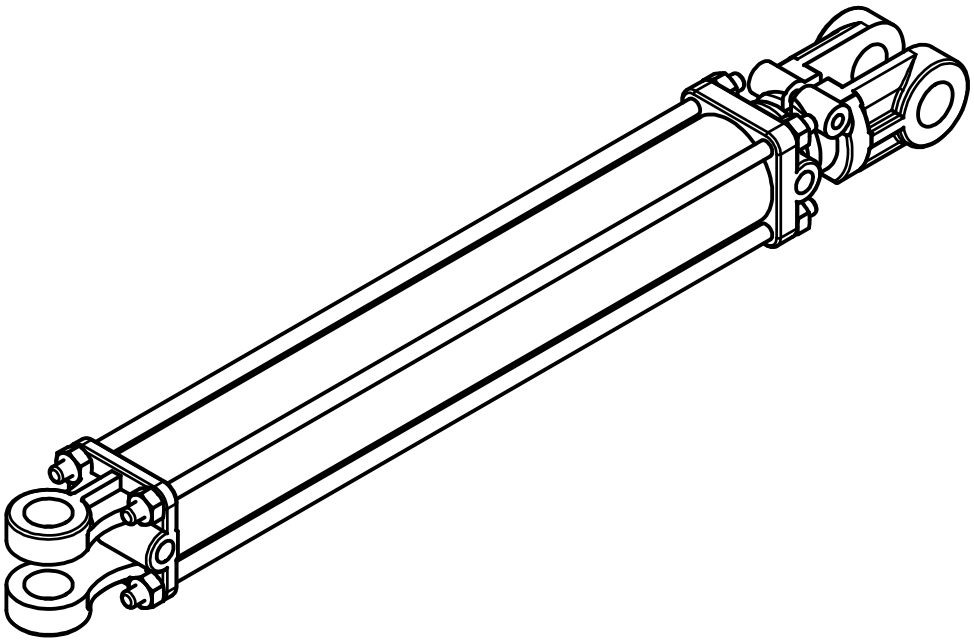

Use Seal Kit # 1490-6929

Squeeze Cylinders

(Rephasing)

Back **Home**

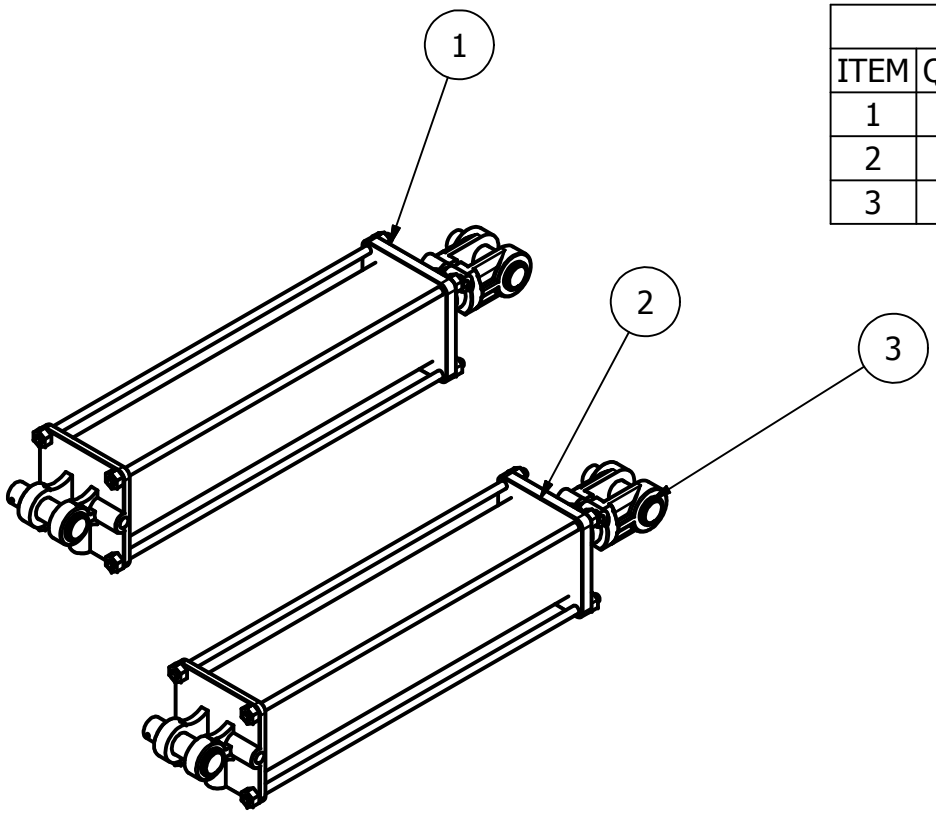

PARTS LIST			
ITEM	QTY	PART NUMBER	DESCRIPTION
1	1	1490-4453	Squeeze Cylinder 3-1/2 x 16 x 1-1/4
2	1	1490-4454	Squeeze Cylinder 3-3/4 X 16 X 1-3/8
3	4	1490-1863	1 x 3-1/8 Cyl Pin

1490-4453 Use Seal Kit
Part # 1490-5029

1490-4454 Use Seal Kit
Part # 1490-5026

Push-Off Table Cylinder
1490-6924
(2 X 24 X 1-1/8)

Back

Home

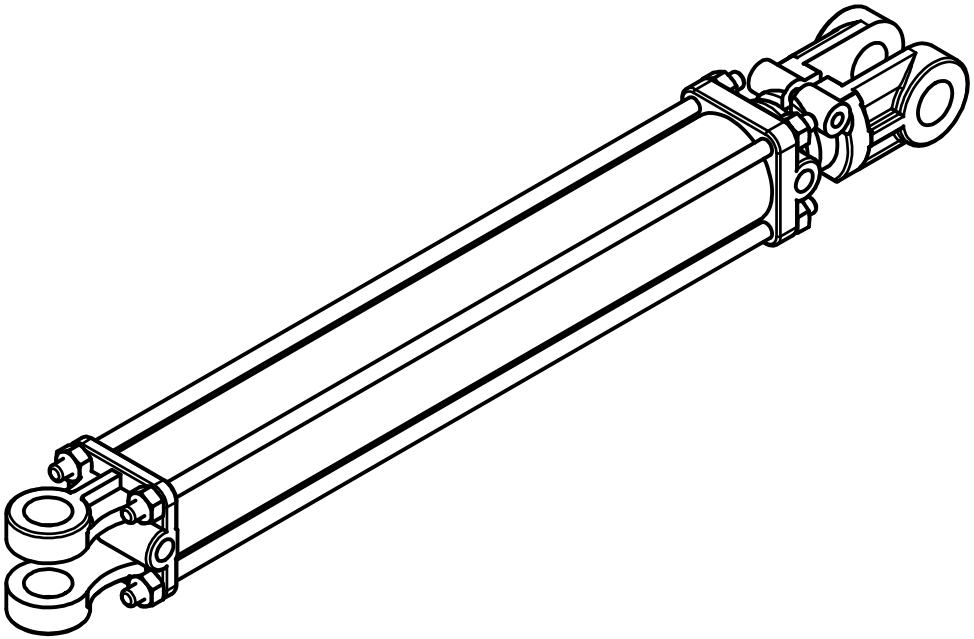

Use Seal Kit # 1490-6931

Main Control Valve #1

(Complete Assy 1490-5870)

Back

PARTS LIST			
ITEM	QTY	PART NUMBER	DESCRIPTION
1	1	1490-6302	Main 4-way control valve
2	2	1490-5916	EHPR Proportional Relief
3	1	1490-6305	#8 Prop. Valve
4	1	1490-6306	#8 Cartridge Valve
5	1	1490-5925	Relief Valve Main
6	2	1490-5918	Size 10 2-Way
7	1	1490-6569	Shuttle Valve
8	1	1490-6199	Flow Regulator 1.25 gal/min
9	2	1490-5917	EHPR #8 Coil
10	2	1490-6248	12VDC #8 ER Coil
11	2	1490-5920	SV Coil
12	1	1490-6225	#10 Orifice Disk .125
13	2	1490-5998	Transducer

Place Curser Over Item For Identification

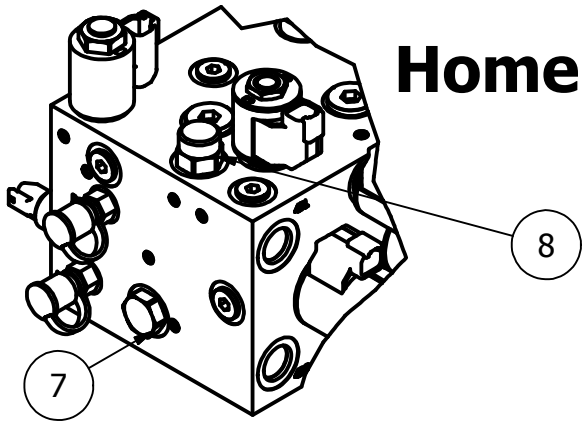

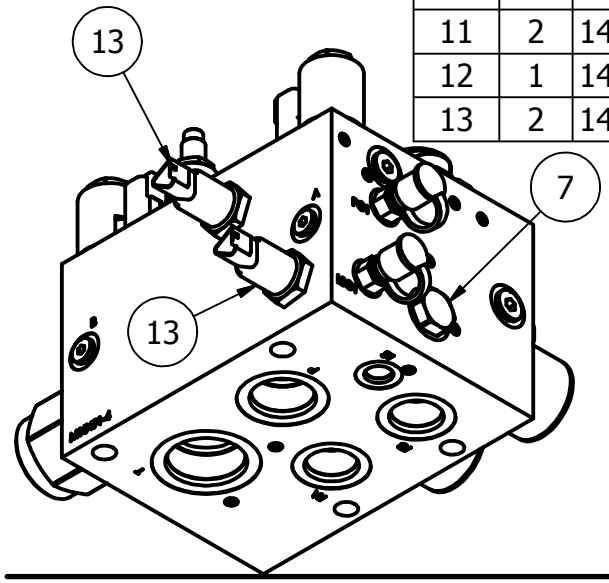

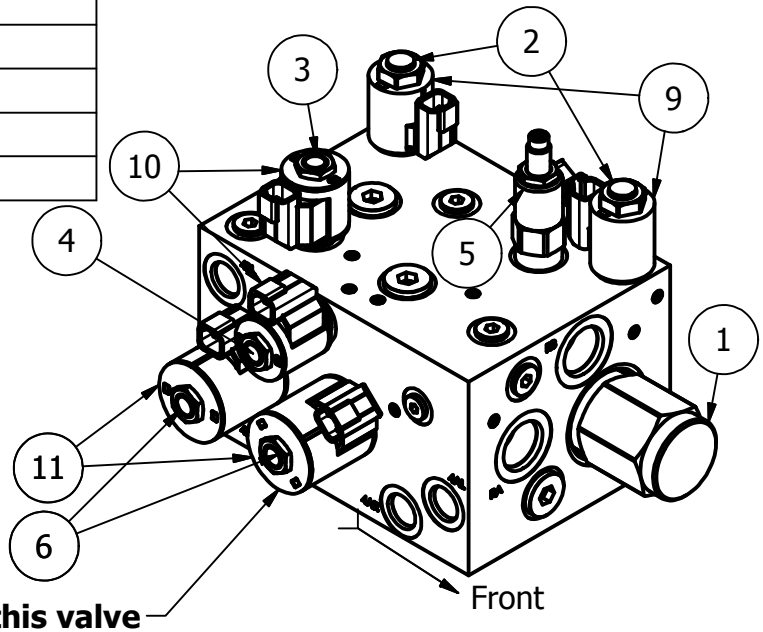

1490-6225 orifice under this valve

Main Control Valve #2

(Complete Assy 1490-5870 Modified)

Back

PARTS LIST			
ITEM	QTY	PART NUMBER	DESCRIPTION
1	1	1490-6302	Main 4-way control valve
2	2	1490-5916	EHPR Proportional Relief
3	1	1490-6305	#8 Prop. Valve
4	1	1490-6306	#8 Cartridge Valve
5	1	1490-5925	Relief Valve Main
6	2	1490-5918	Size 10 2-Way
7	1	1490-6569	Shuttle Valve
8	1	1490-6199	Flow Regulator 1.25 gal/min
9	2	1490-5917	EHPR #8 Coil
10	2	1490-6248	12VDC #8 ER Coil
11	2	1490-5919	Size 12 2-Way
12	4	1490-5920	SV Coil
13	2	1490-5998	Transducer

Place Curser Over Item For Identification

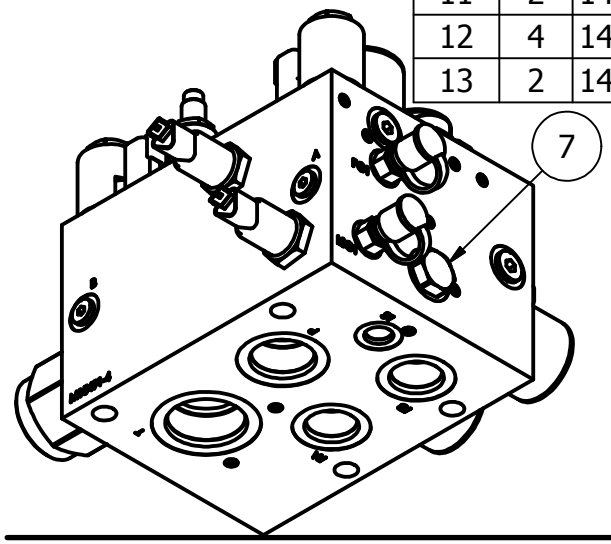

Home

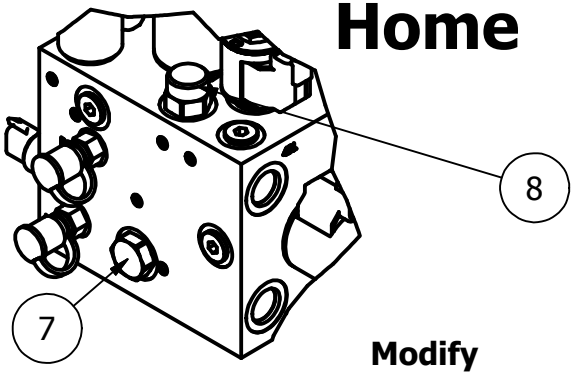

Modify

Add 2 - 1490-5919 #12 Valves with 1490-5920 SV Coils for Dbl Turn

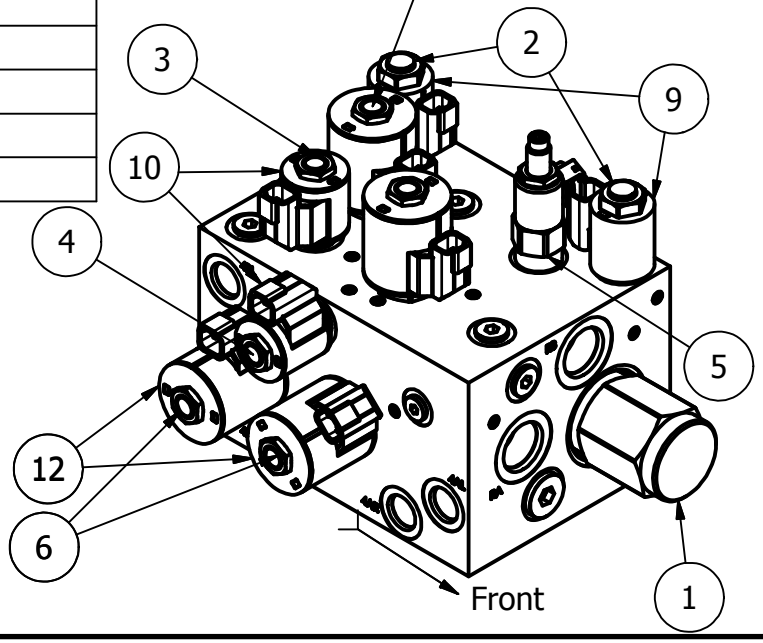

Frontend Control Valve

(1490-5871)

PARTS LIST			
ITEM	QTY	PART NUMBER	DESCRIPTION
1	2	1490-5926	Relief Valve Front Down
2	1	1490-5924	Relief Valve Front/Rear
3	2	1490-5919	Size 12 2-Way
4	4	1490-5918	Size 10 2-Way
5	2	1490-5922	Size 10 Check Valve
6	2	1490-5923	Size 08 Check Valve
7	2	1490-5921	Pilot Check Cartridge Valve
8	6	1490-5920	SV Coil

Place Curser Over
Item For Identification

Back

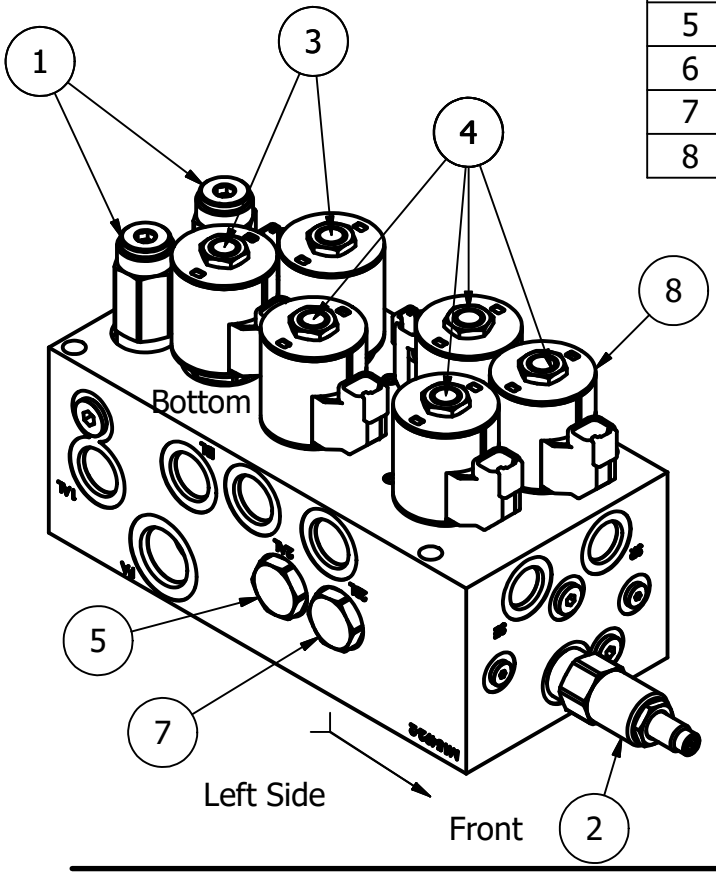

Home

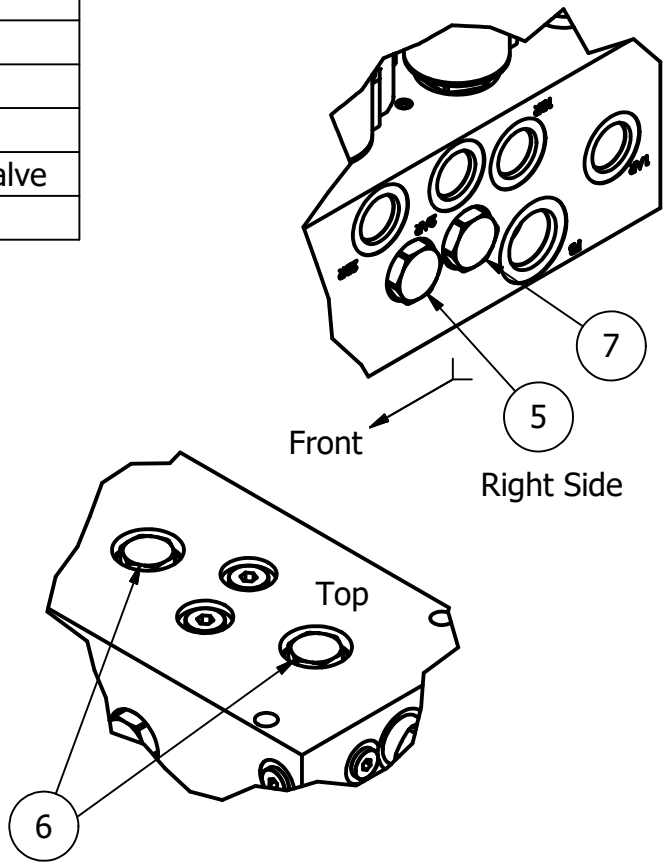

Rear Control Valve

(1490-5873)

Back

PARTS LIST			
ITEM	QTY	PART NUMBER	DESCRIPTION
1	12	1490-5918	Size 10 2-Way
2	12	1490-5920	SV Coil
3	1	1490-5924	Relief Valve Front/Rear

Home

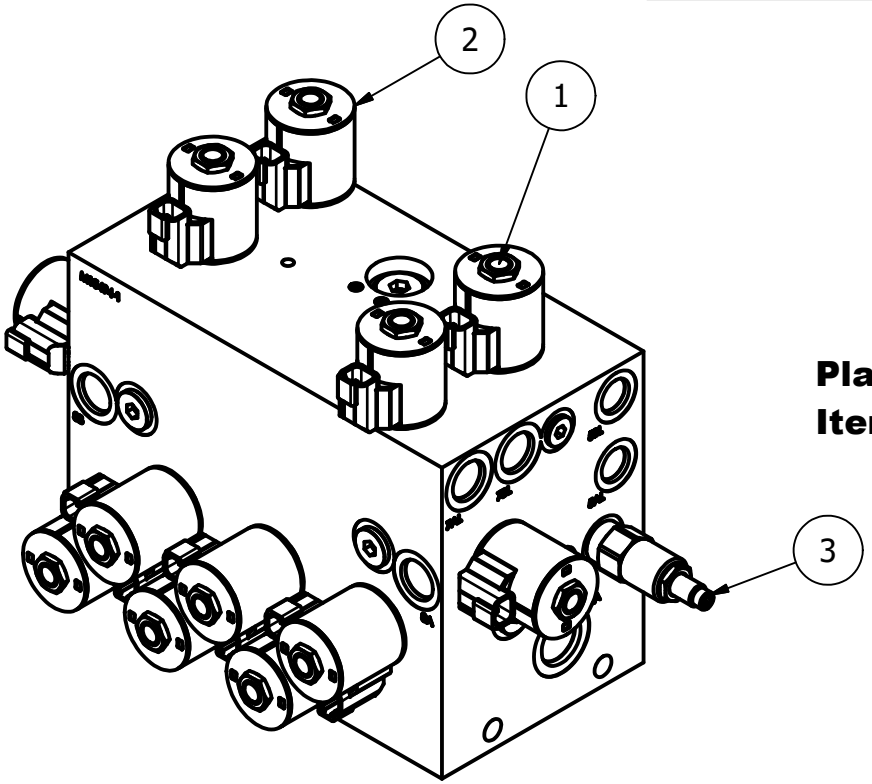

Place Curser Over Item For Identification

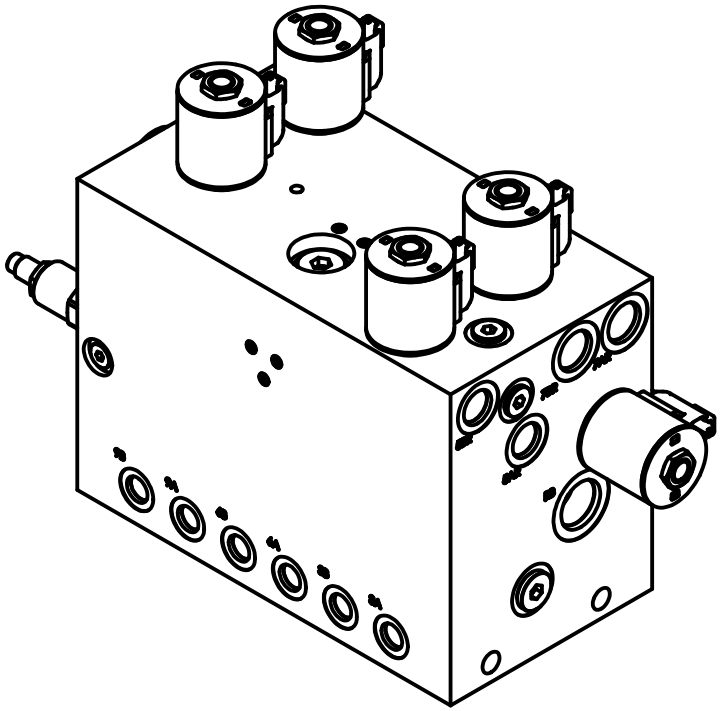

8500 Hoist Valve
1490-6979

Back

Home

PARTS LIST			
ITEM	QTY	PART NUMBER	DESCRIPTION
1	1	1490-6979	8500 Hoist Valve Assy Complete
2	1	1490-5900	Check Valve
3	1	1490-5901	Size 12 2-Valve (NC)
4	1	1490-5902	Pilot Relief Valve
5	1	1490-5914	Counterbalance Valve
6	2	1490-5919	Size 12 2-Way Valve
7	3	1490-5920	#10 ER Coil

Place Curser Over
Item For Identification

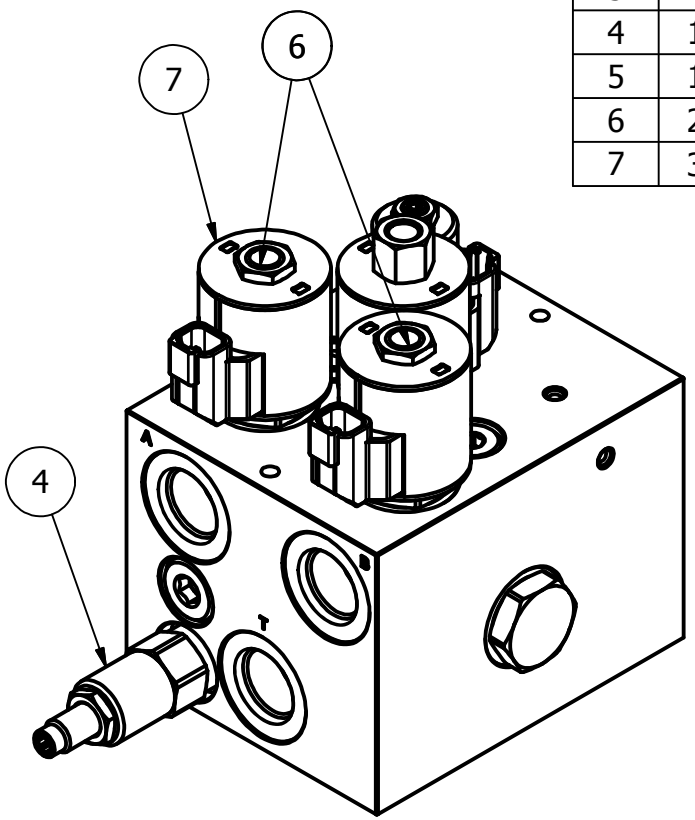

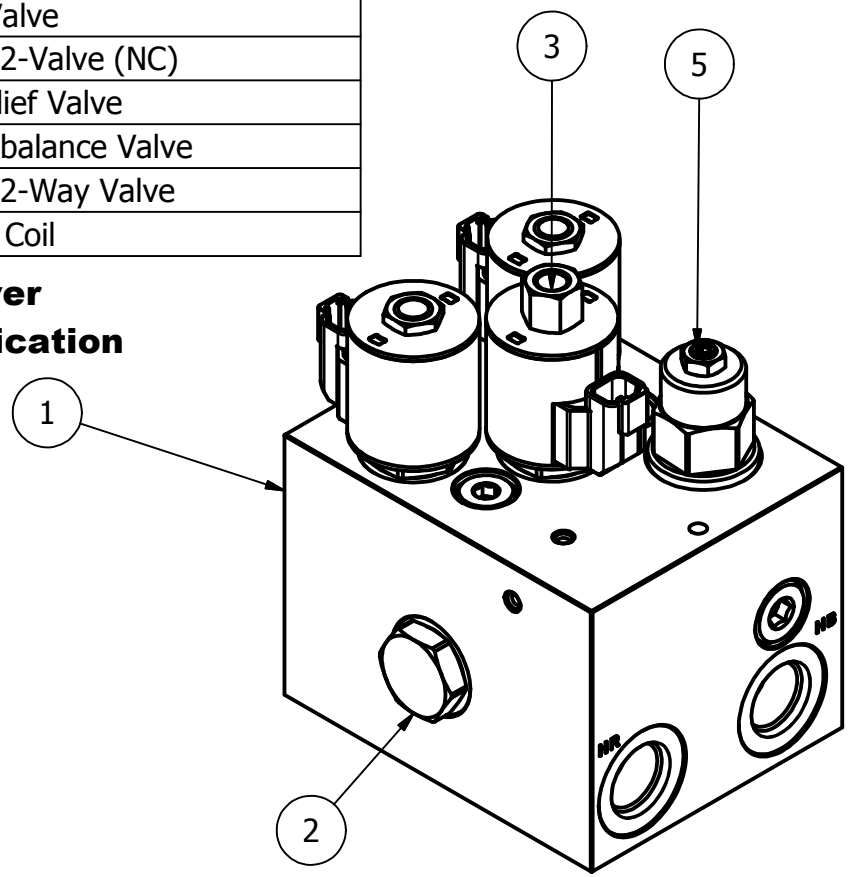

1/4-Turn Control Valve
1490-5804

Back

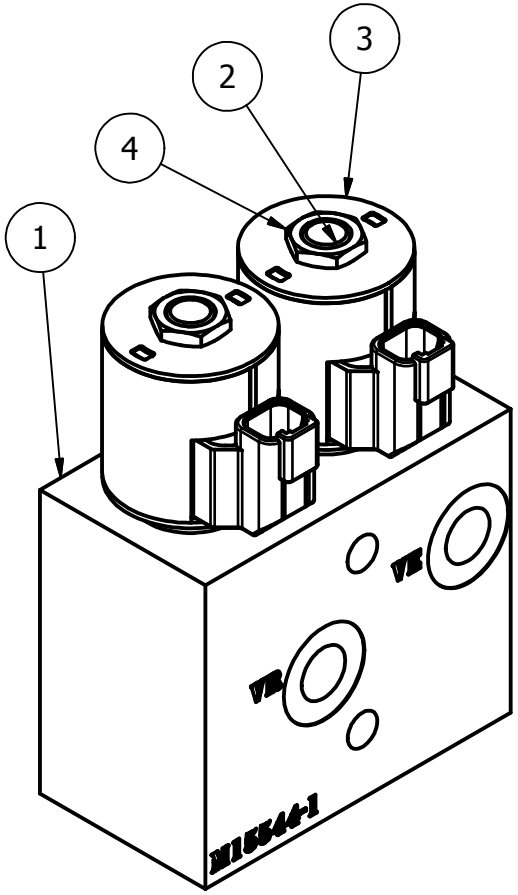

PARTS LIST			
ITEM	QTY	PART NUMBER	DESCRIPTION
1	1	M15544-1	Valve Body
2	2	1490-5933	Size #10 2-Way (NC)
3	2	1490-5920	12V #10 ER Coil
4	2	7004400	Jam Nut

Home

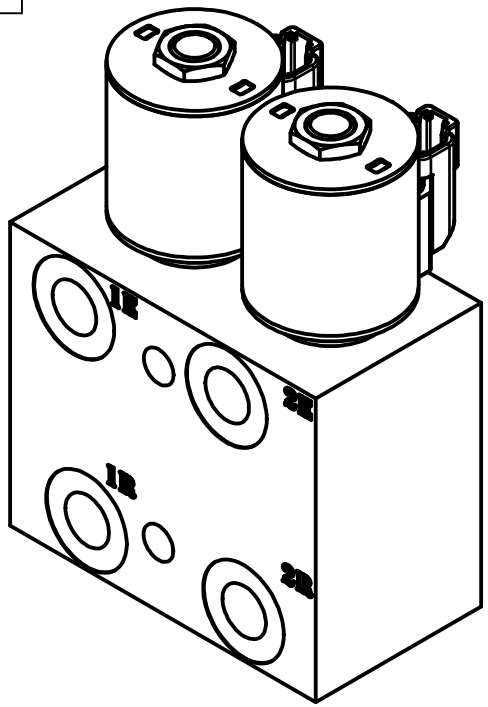

Slide Assist Cylinder

Back **Home**

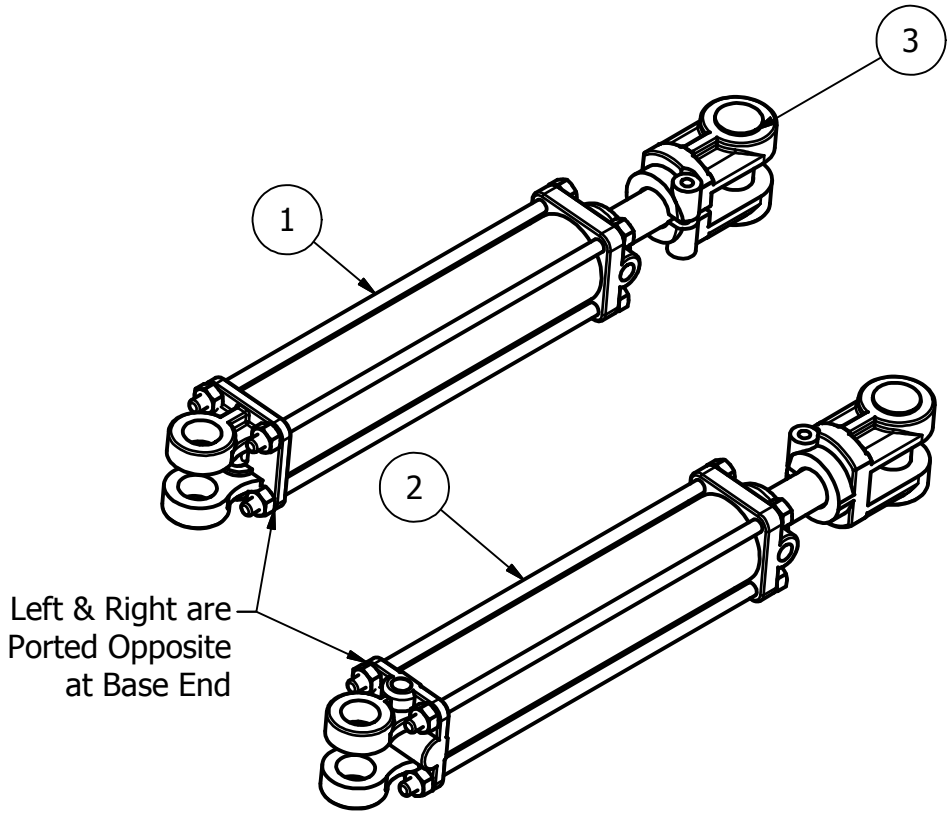

PARTS LIST			
ITEM	QTY	PART NUMBER	DESCRIPTION
1	2	1490-5146	RF & LR 1/4 Turn Cyl
2	2	1490-5145	LF & RR 1/4 Turn Cyl.
3	4	1490-4566	1 X 2-3/4 Cylinder Pin
4	4	Cotter Pin	1/8 X 1-3/8 Cotter Pin

1490-5145 & 1490-5146 Use
Seal Kit # 1490-4627

ECU Plate Detail

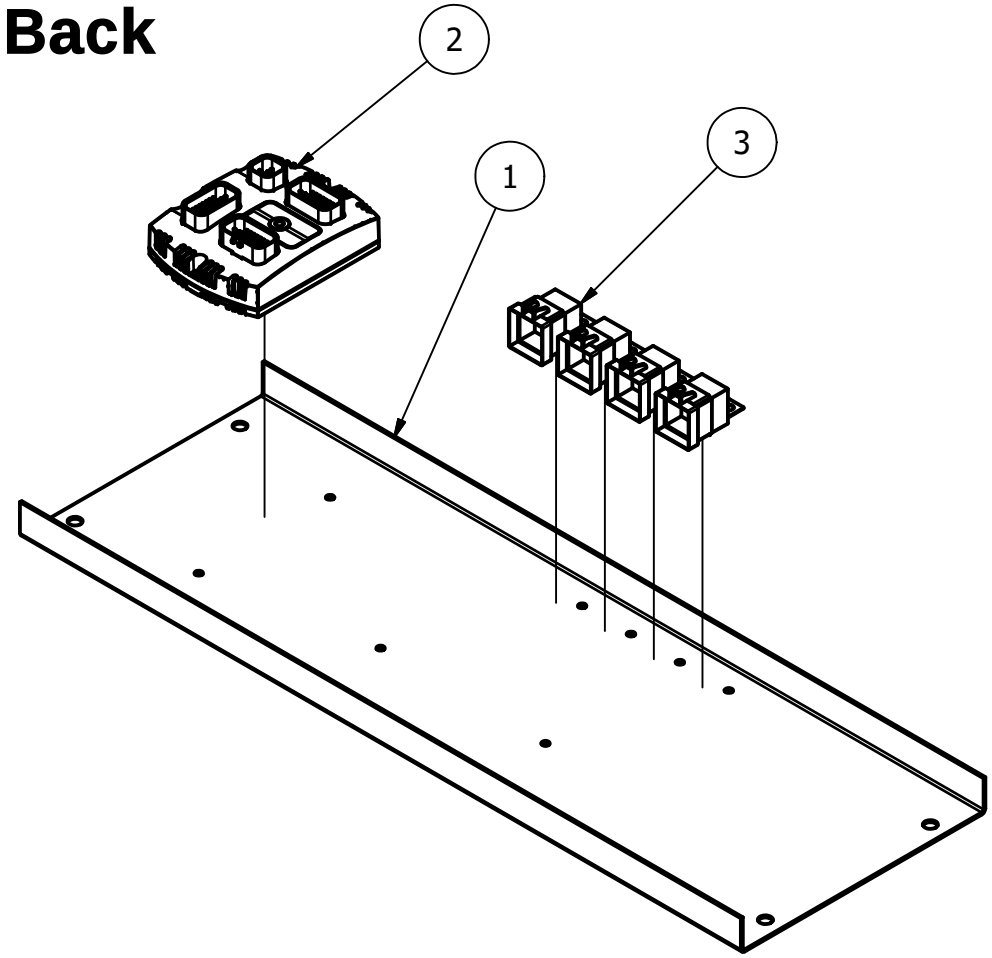

PARTS LIST			
ITEM	QTY	PART NUMBER	DESCRIPTION
1	1	5550-335	ECU Wiring Mount
2	1	1490-6083	Hydraforce 2415 ECU
3	4	1490-5053	Water Tight Relay 12V (A/C)

A/C Detail
2018 Able Cabs

Back **Home**

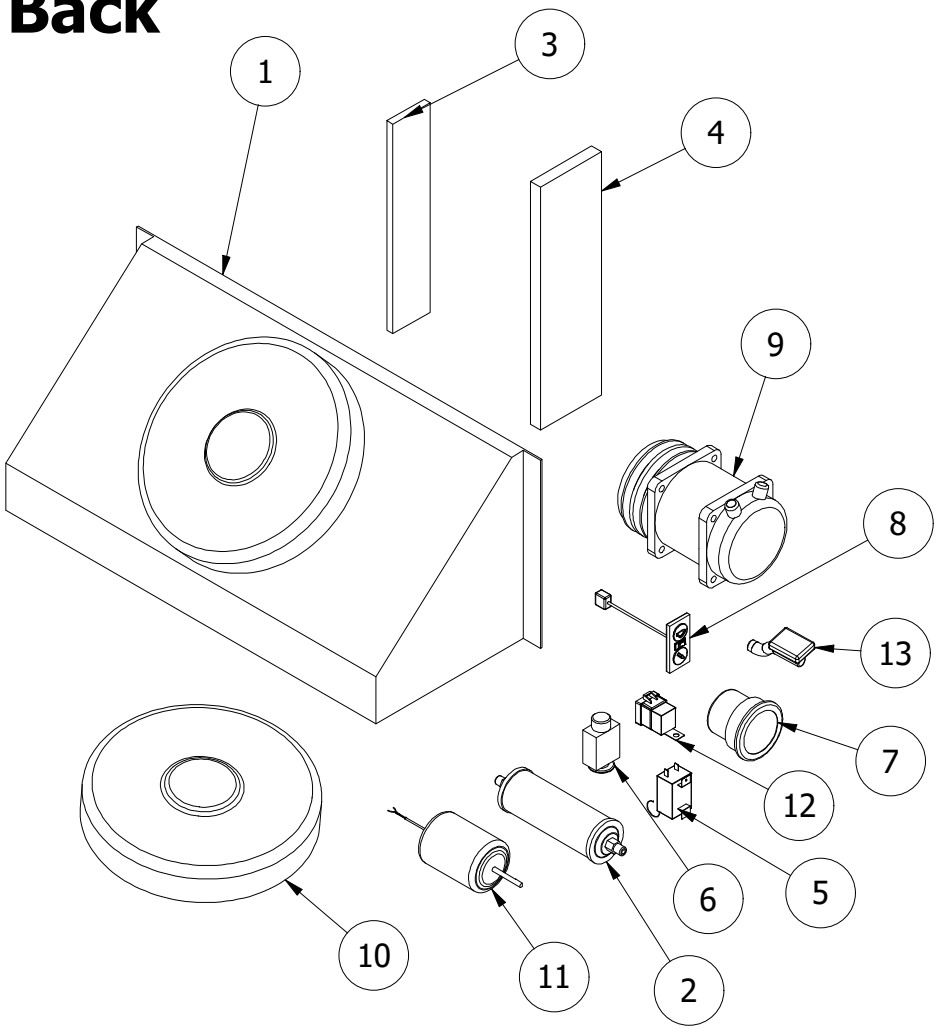

PARTS LIST		
ITEM	PART NUMBER	DESCRIPTION
1	1490-3737	Remote A/C Condensor Complete Assy
2	1490-4658	Receiver Drier
3	1490-6529	Recirculating Filter (Foil)
4	1490-6528	Fresh Air Filter (Paper)
5	1490-6532	Thermostat
6	1490-6533	Expansion Valve
7	1490-6527	A/C louver vent
8	1490-6531	A/C Control Panel
9	1490-7216	Denso A/C Compressor
10	1490-6572	Condensor Electric Fan
11	1490-6530	Blower Motor
12	1490-6534	Blower Motor Resistor (2 Required)
13	1490-6518	Electric Water Valve

Charge with approx. 3 lbs of R-134A
Compressor comes fully charged with 8oz of oil

8500 Squeeze
Poly Detail

Back **Home**

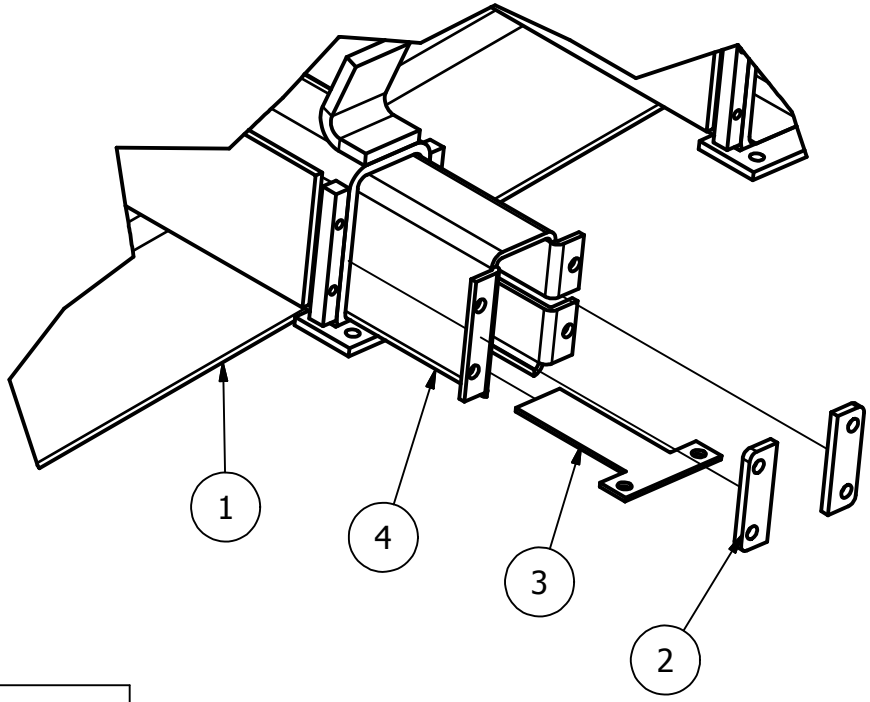

PARTS LIST			
ITEM	QTY	PART NUMBER	DESCRIPTION
1	1	8570A2	8500 Subframe
2	2	2460-320	Squeeze Poly Strap
3	1	2460-328	Squeeze Wear Plate
4	1	2460-331	36" Squeeze Poly Liner

StackFrame
Microswitch

1490-5764

Back **Home**

Head assy Only W/Spring Arm
1490-6080

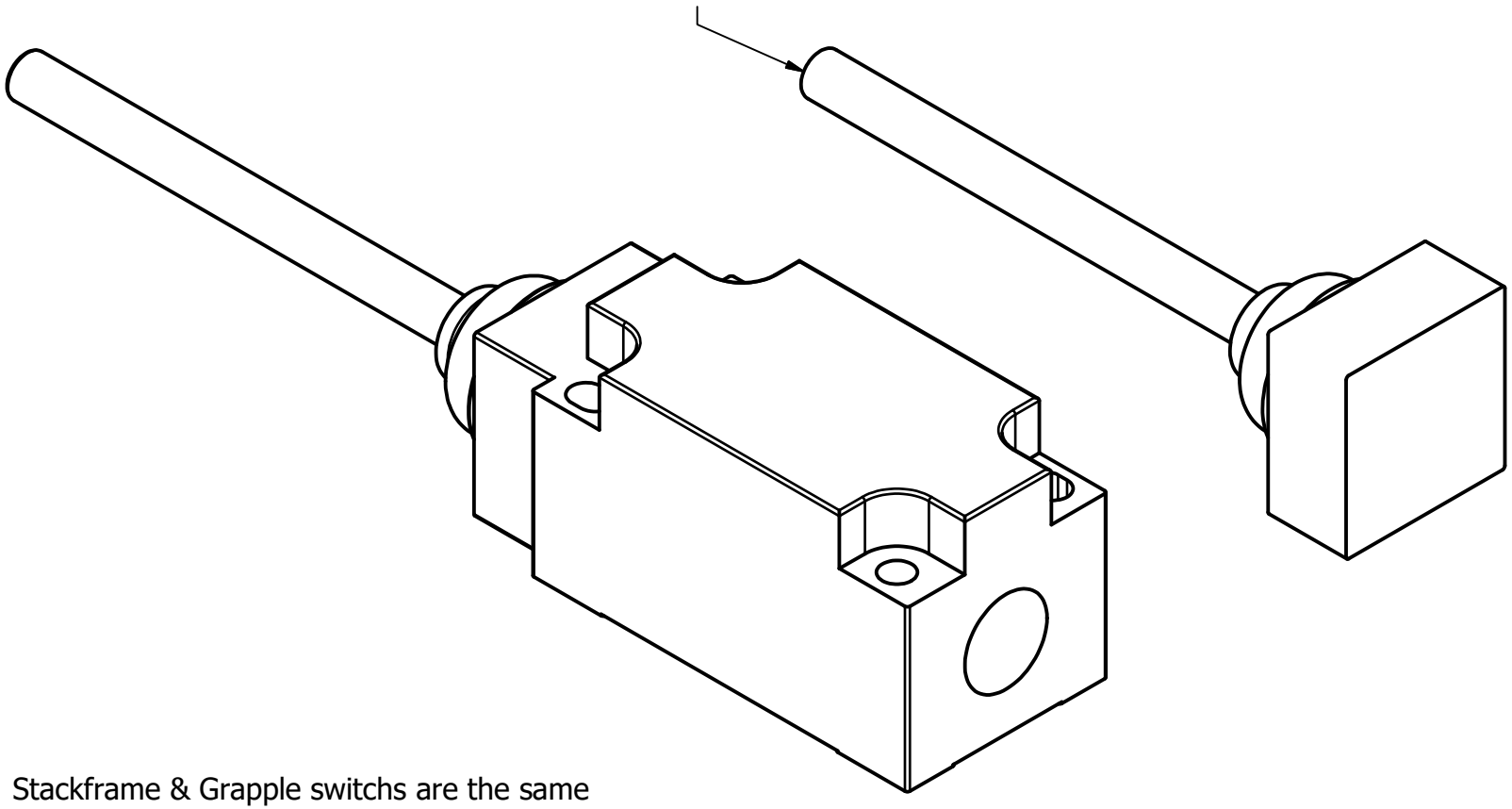

Stackframe & Grapple switchs are the same

Rear Axle Assemblies

Back

Home

Complete Rear Axle Assembly
Front; Part #82700002
Stinger SCAB HD DT463P 617 AC
Rear; Part #82800002
Stinger SCAB HD RT463P 617 AC

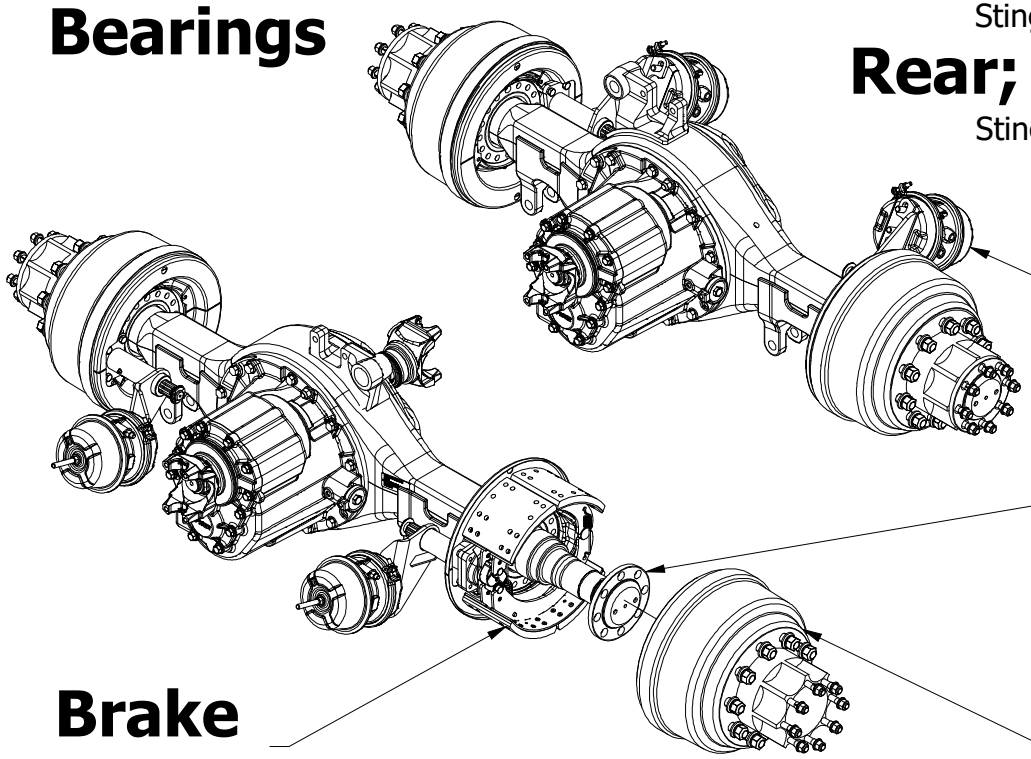

Rear Axle
Seals & Bearings

Back

Home

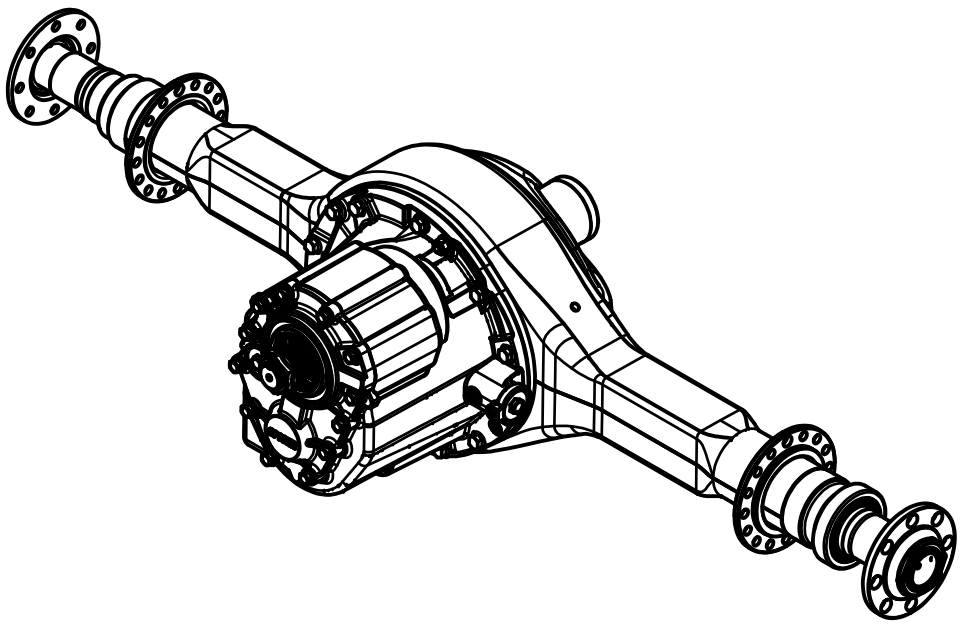

Inner Rear Axle Bearing
Part #1490-6018

Outer Rear Axle Bearing
Part #1490-6019

Rear Wheel Seal
Part #1490-5165

Rear Wheel Wear Sleeve
Part #1490-5503

Rear Axle Plate Detail

Back

Home

Axle Flange Gasket
Part #1490-5821

Axle Shaft Cone
Part #1490-5605

Axle Shaft Washer
Part #1490-5606

Axle Drive Stud
Part #1490-5027

Axle Shaft Nut
Part #1490-5607

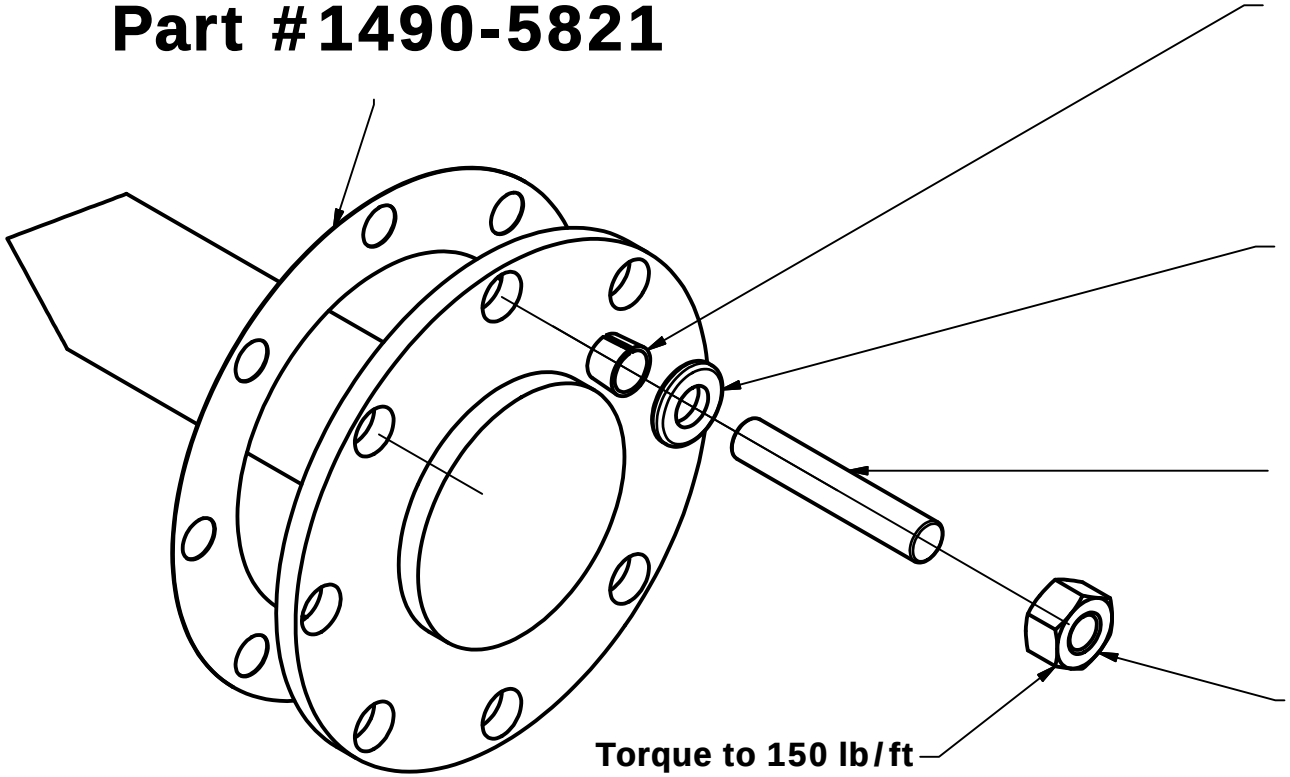

Rear Wheel Studs & Nuts

Back

Home

S/N A1007 thru S/N A1011

(All Hub Pilot Axles)

M22x1.5 Thread

Euclid Stud: Part # 1490-5803

Euclid Nut: Part # 1490-5794

Rear Hub
& Brake

Rear Axle
Detail

Rear Axle Hub & Drum Detail

(Complete Assy Including Studs, Nuts & Drum)

1490-5837

Back **Home**

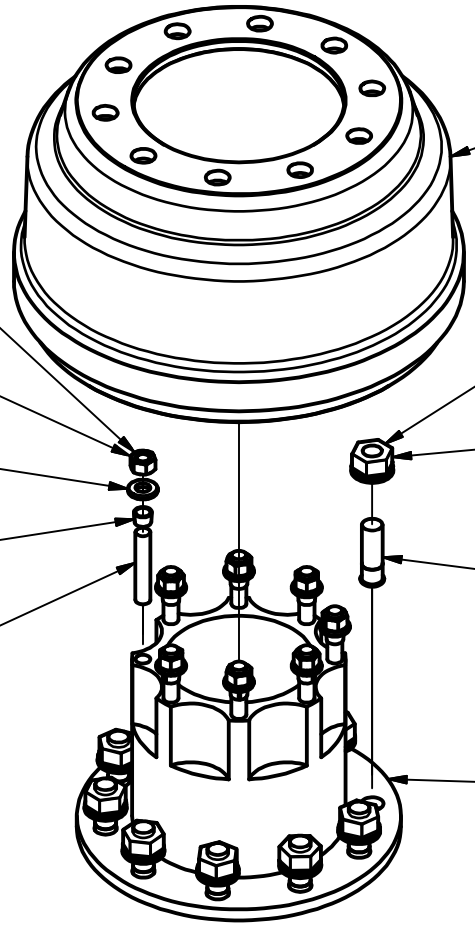

Torque Axle Plate Nuts 150 Ft/Lb

1490-5607
Nut

1490-5606
Washer

1490-5605
Cone

1490-5027
Stud

1490-5840
Drum

Torque Wheel Nuts 450-500 Ft/Lb

1490-5794
22 X 1.5 Metric Nut

1490-5803
22 X 1.5 Metric Stud

1490-5832
Hub

Rear Axle Shaft

Back

Home

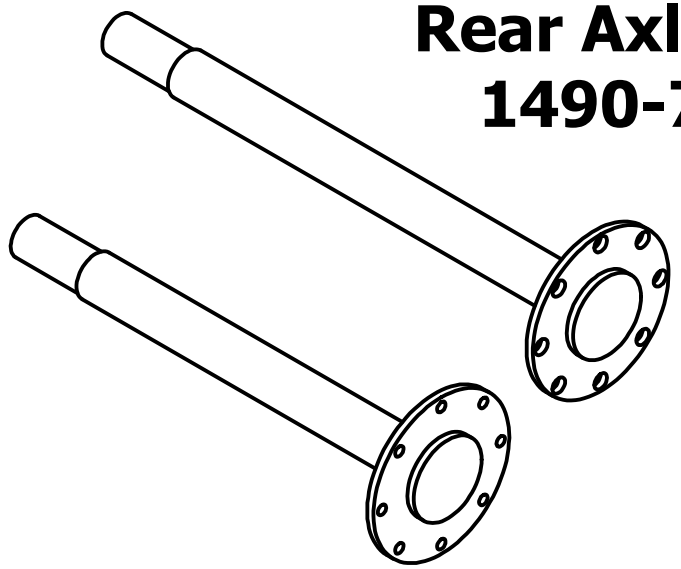

Rear Axle
Plate Detail

Brake Pad Sets

(come with mounting Hardware Kit)

Back

Home

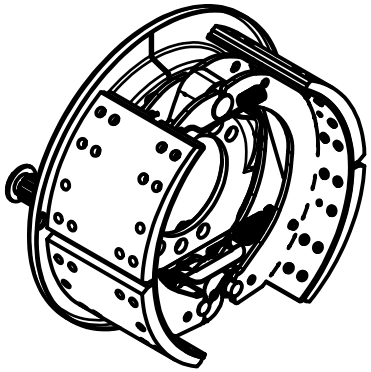

Front Axle
Eaton Lined Shoe Set
Part #1490-4906

(1 set per Wheel)

Rear Axle
Eaton Lined Shoe Set
Part #1490-4907

(1 set per Wheel)

Stinger Chassis
Air-Brake Components

Back **Home**

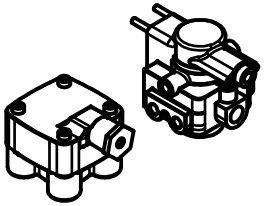

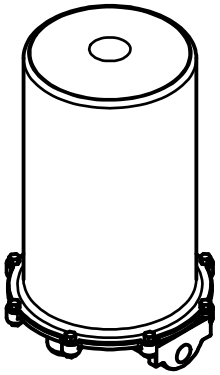

PARTS LIST	
PART NUMBER	DESCRIPTION
82010001	Air Accumulator Tank (No Fittings)
82010012	Air Tank Drain Valve
82010017	Air Tank Safety Valve (Pop-Off)
82010002	Air Tank Hoop Brackets W/Bolt
83110045	Inside Air Tank Z-Bracket
83110044	Air Tank Hanger Bar
82010003	Air Drier Tank W/Brackets
82010008	Bendix Service Valve
82010007	Bendix Spring Valve (Park Brake)
82010009	Cab-Air Regulator Valve
82010011	Air line Check Valve
82010018	Air Line Double Check Valve

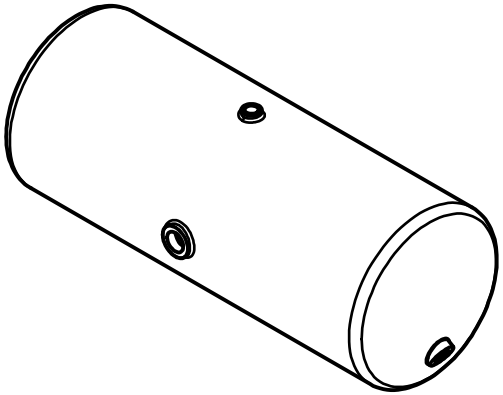

Rear Axle Brake Parts

Hub & Drum Assemblies Come with Wheel & Axle Plate Studs
(No Nuts, Cones, Washers, or Gasket)

Back

Home

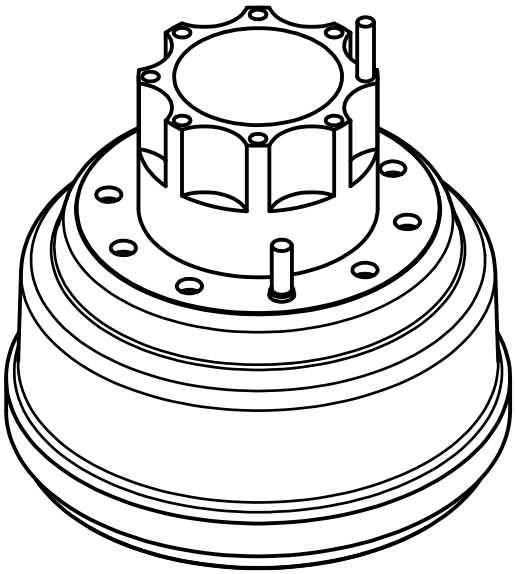

RH Hub & Drum Assy
Part #1490-5835

LH Hub & Drum Assy
Part #1490-5836

Eaton Lined Shoe Set
Part #1490-4907

(1 Per Wheel)

Drive Shaft Detail

Back

Home

Front PTS Drive Shaft Assy W/U-Joints and "L" Fuse Set Part# 83510007

1710 U-Joint Part# 1490-2454

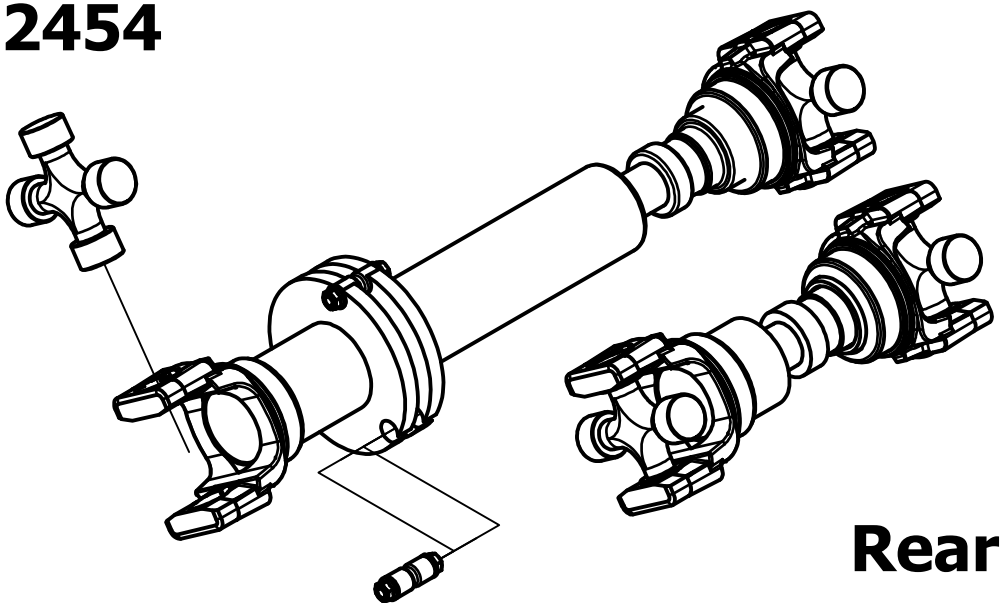

"L" Fuse Set Part# 1490-5750

Rear Drive Shaft Assy W/U-Joints Part# 83510008

Front Axle Components

Back

Home

Brakes

Wheel Studs

Steering

Shocks & Bumper

Springs & Hangers

Other

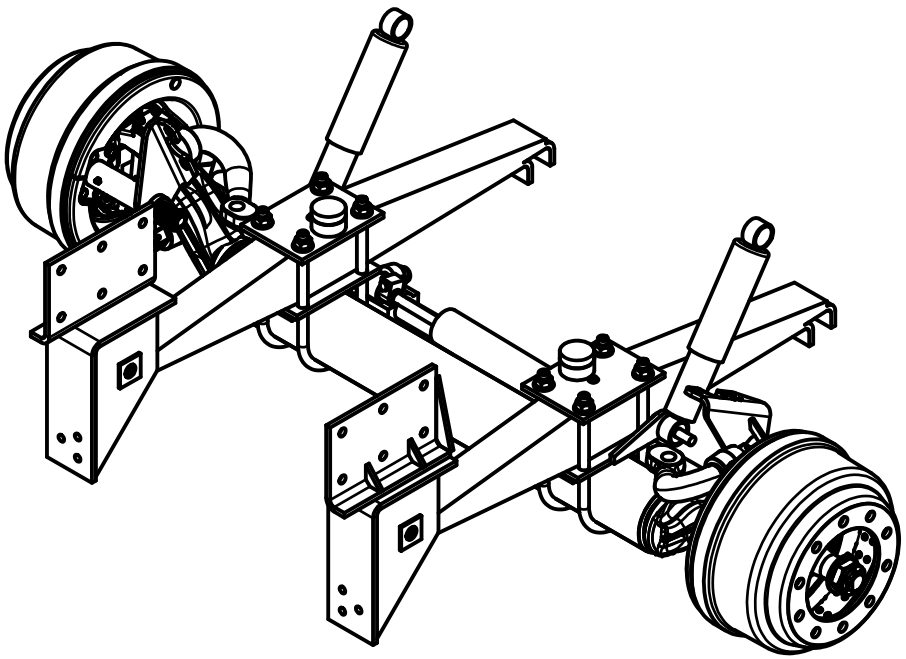

Front Axle Hub & Drum Components

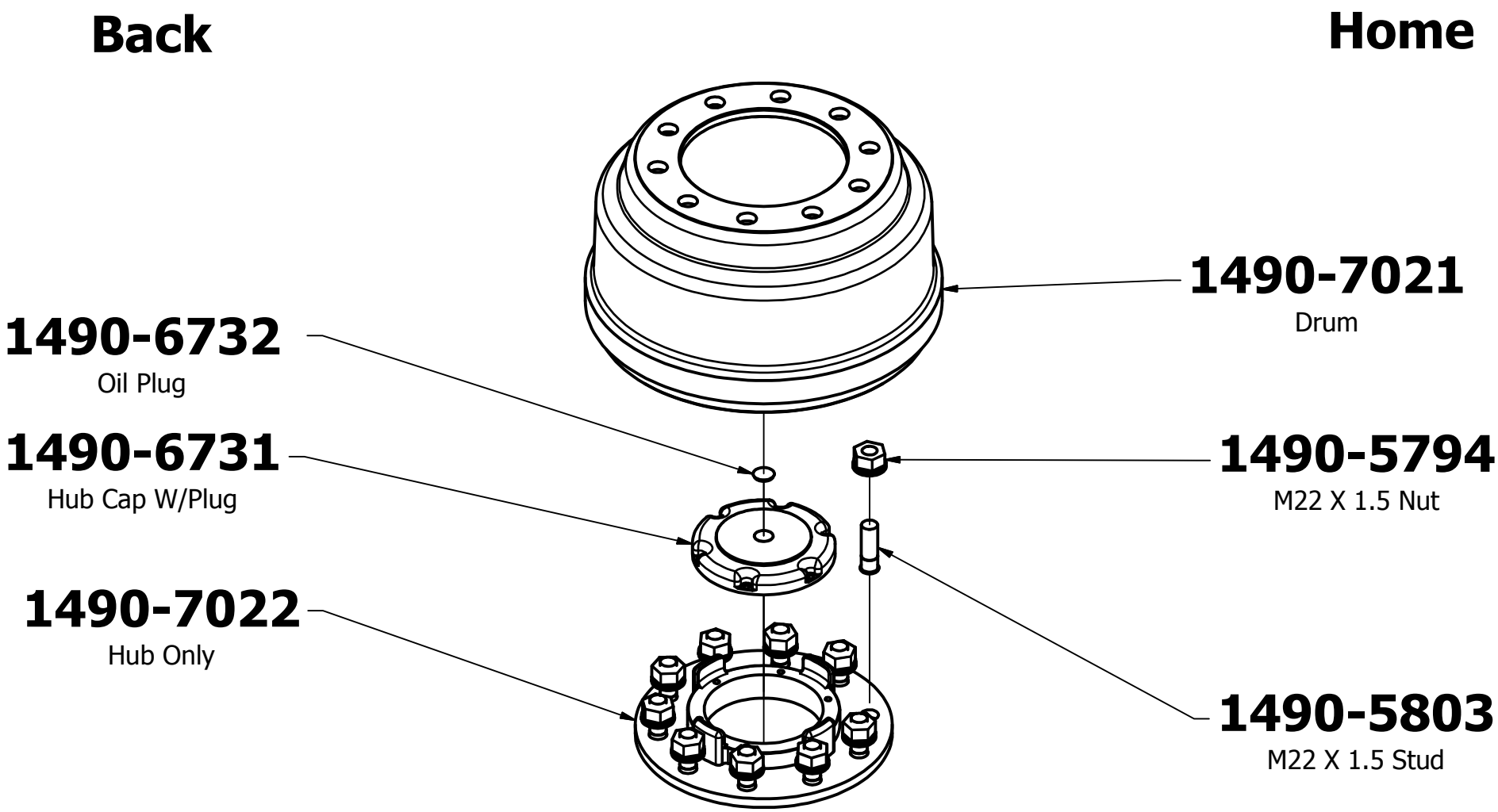

Front Spring Stack
(11,250 lb stack)

12 Leaf Front Spring Stack
1490-4989

U-bolt 1490-5805, Washer & Nut 1490-6022, 1490-5405
Spring Bolt & Nut 1490-5003, 1490-5004

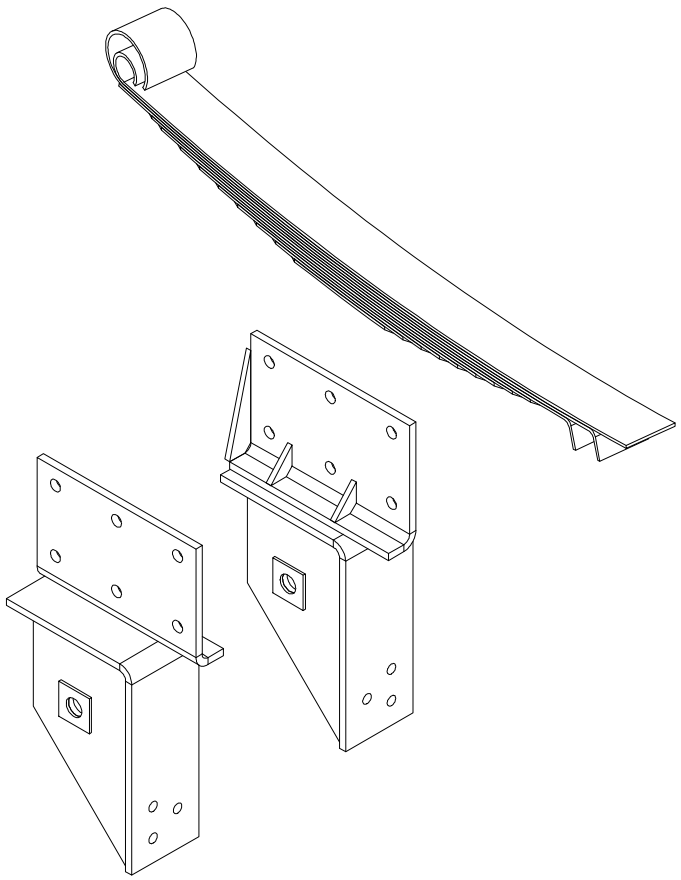

LH Front Spring Hanger
Part # 1490-4729

RH Front Spring Hanger
Part # 1490-4728

LH Rear Spring Hanger
Part # 1490-4730

RH Rear Spring Hanger
Part # 1490-4731

Bushing & Poly Parts

Front Axle Wheel
Studs & Nuts

Back Home

Euclid Stud Front Hub Pilot M22x1.5
Part # 1490-5803

Euclid Nut Front Hub Pilot M22x1.5
Part # 1490-5794

Tanks & Tank Mounts

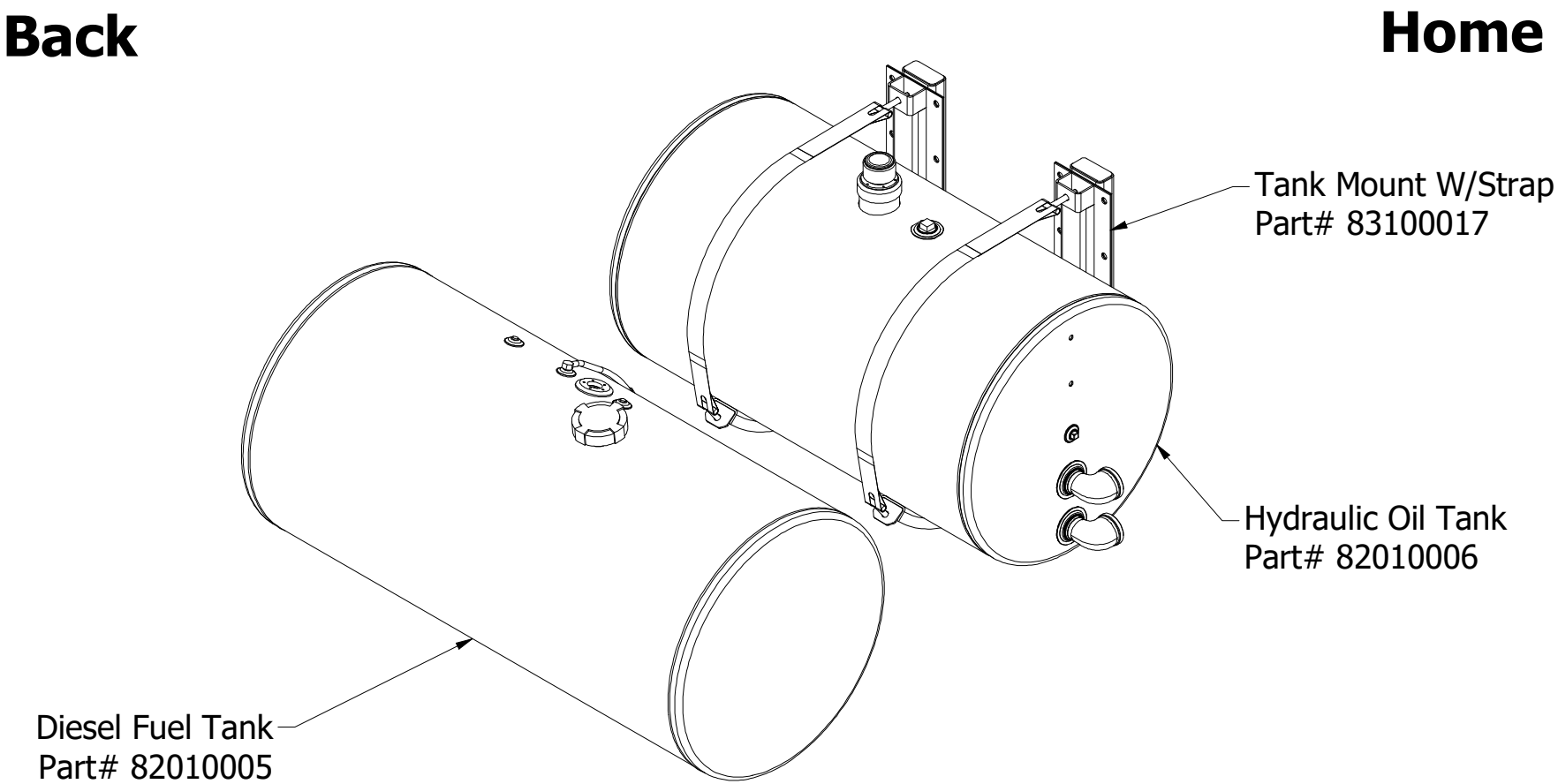

Battery Box & Hyd Tank
Tank Supports
MTU

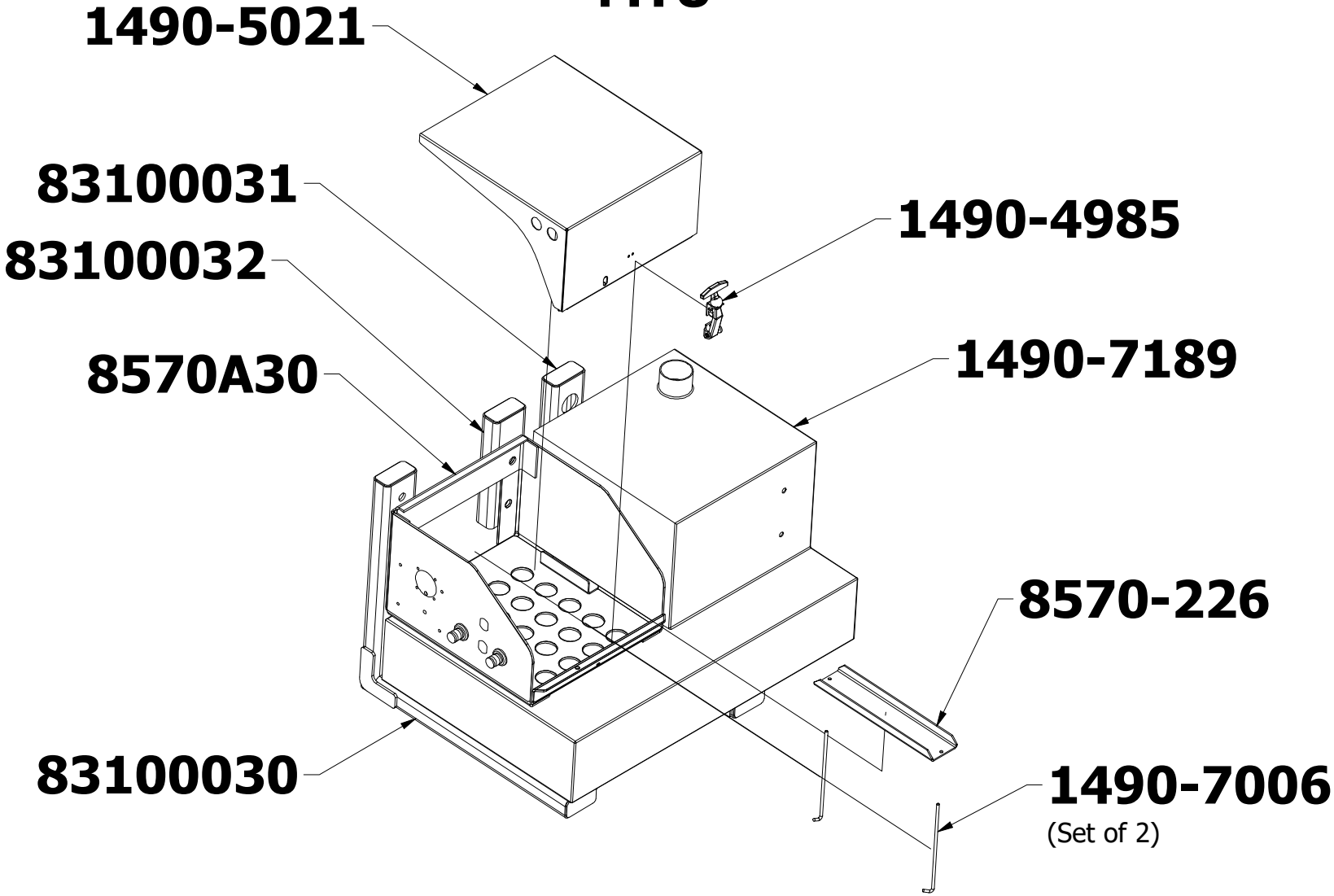

Stinger Chassis Mounting Weldments
MTU 1300

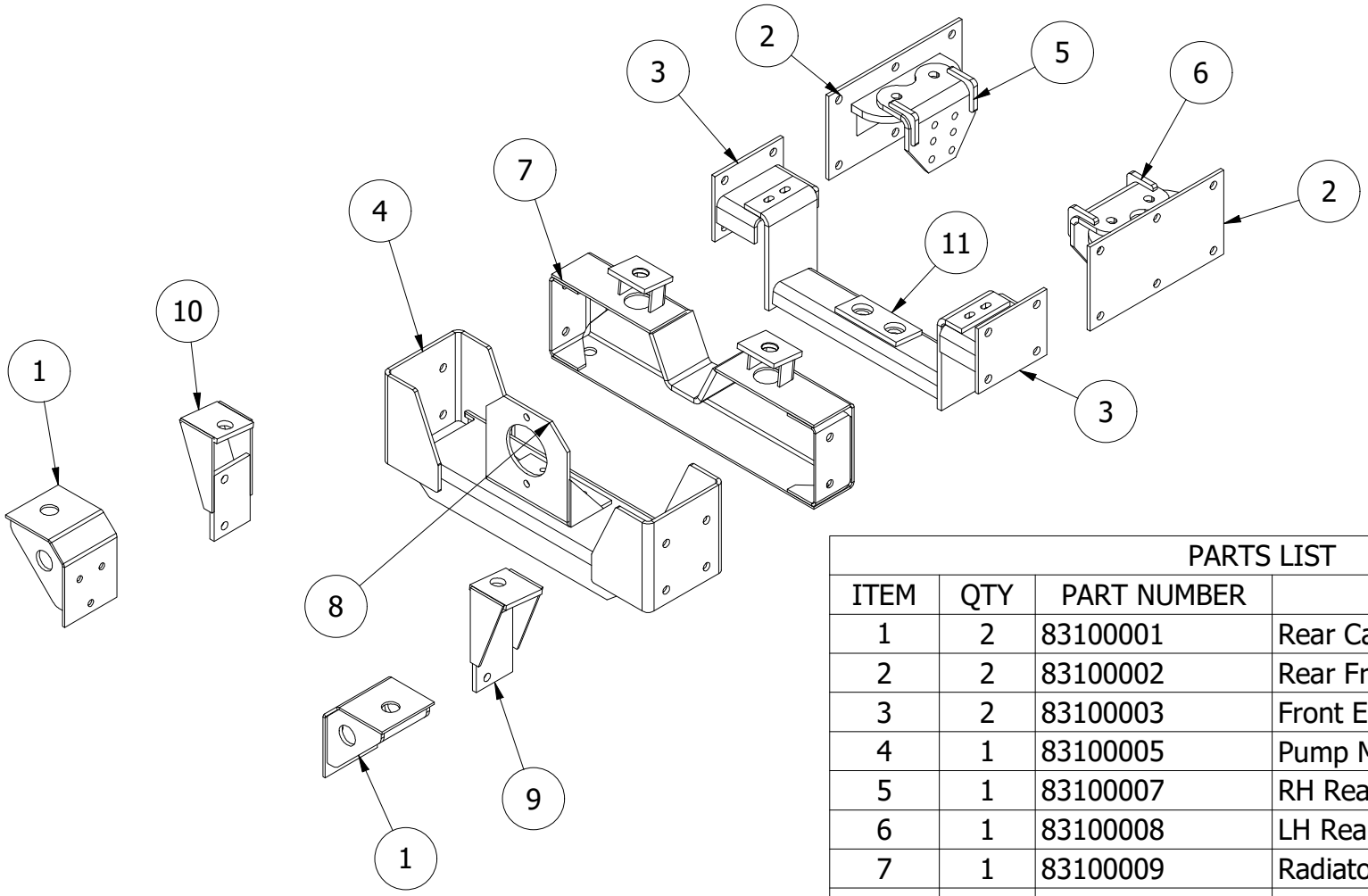

PARTS LIST			
ITEM	QTY	PART NUMBER	DESCRIPTION
1	2	83100001	Rear Cab Mount
2	2	83100002	Rear Frameside Engine Mount
3	2	83100003	Front Engine Outside Mount
4	1	83100005	Pump Mount Crossmember
5	1	83100007	RH Rear Engine Mount
6	1	83100008	LH Rear Engine Mount
7	1	83100009	Radiator Support Weldment
8	1	83100010	Pump Mount Weldment
9	1	83100019	LH Outside Radiator Mount
10	1	83100020	RH Outside Radiator Mount
11	1	83100029	Front Engine Mount

Leaf Spring
Bushing & Poly Sets

Back

Home

Front Poly Wear Pad Kit
Part # 1490-4575
(one Side Olny)

Rear Poly Wear Pad Kit
Part # 1490-4053
(one Side Olny)

Poly Slipper Steel Plate
Part # 1490-7069
(one Side Olny)

Front Leaf Spring Bushing
Part # 1490-4428
(one Side Olny)

Springs & Hangers

Brake Shoe Sets

Back

Home

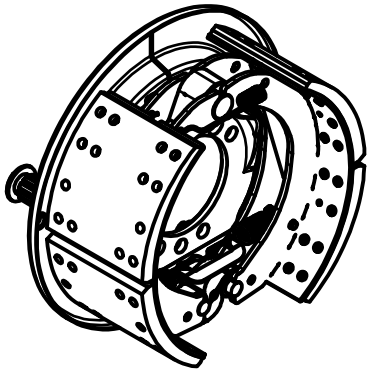

Front Axle (1 Per Wheel)
Part #1490-4906

Rear Axle (1 Per Wheel)
Part #1490-4907

Steering Components

Back **Home**

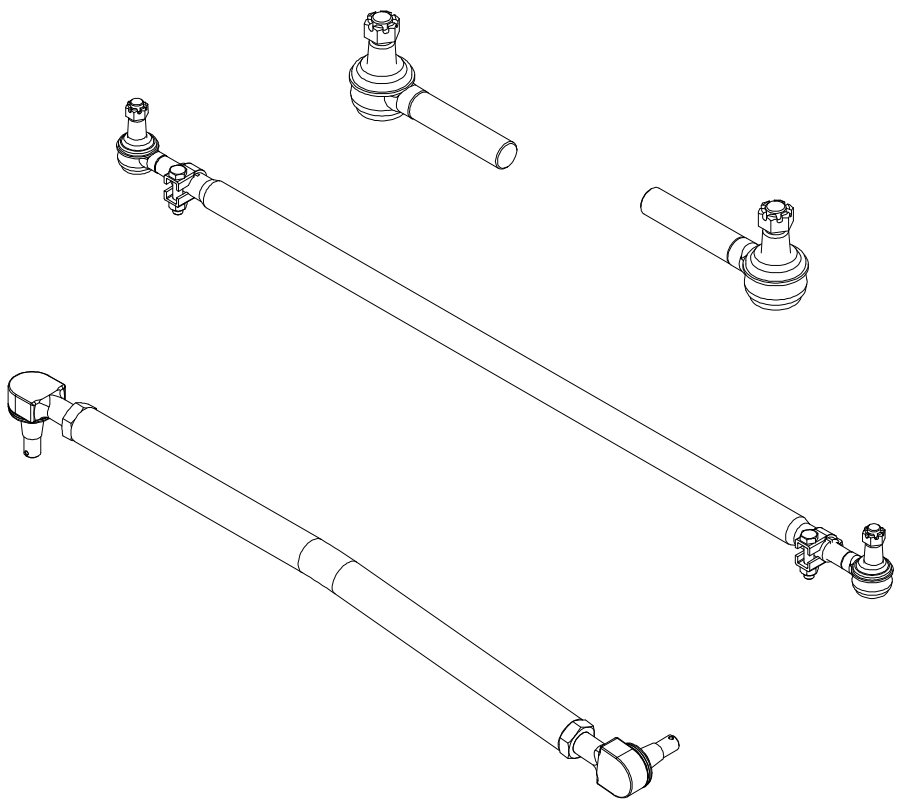

Complete Tie Rod Assy
Part #1490-6764
S/N A1000-Later

LH Tie Rod End
Part #1490-4661

RH Tie Rod End
Part #1490-4662

Complete Drag Link Assy
Part #82500003

Drag Link End
Part #1490-7221

Front Axle Shock
Part # 1490-5181

(No Spacers or Bolt)

Back **Home**

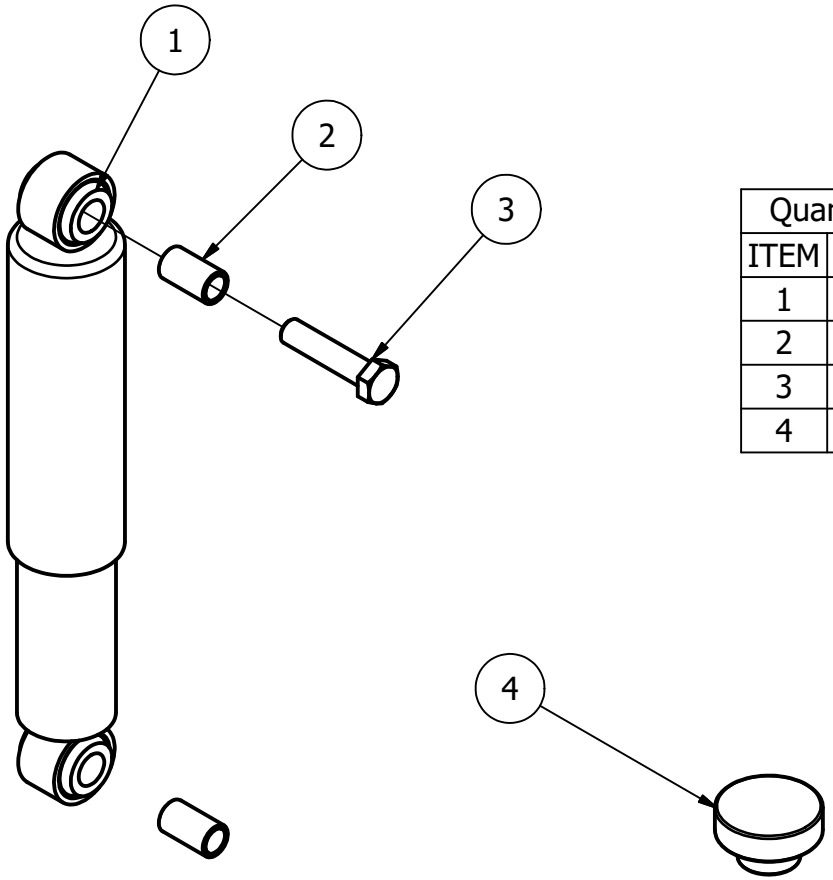

Quantity per side		PARTS LIST	
ITEM	QTY	PART NUMBER	DESCRIPTION
1	1	1490-5181	Monroe Front Shock
2	2	1490-5301	Front Shock Spacer Sleeve
3	1	1490-6597	3/4-10 UNC - 3.50 Gd 8
4	1	1490-4068	Front Axle Bumper

Monroe Magnum 70 Part# 74025

Class 7-8 Truck & Bus Shock

15-¾" collapsed 24-¾" Extended

35-16 Rubber Bushings for the Old CCC Shock **1490-6232** = Qty 4 per shock

Front Axle Misc Parts

Back

Home

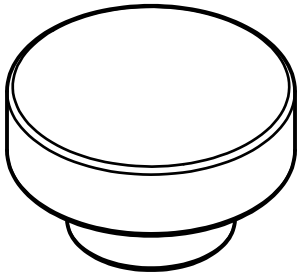

Axle Bumper
Part # 1490-4068

Tire & Wheels

Back

Home

Front
Tires & Wheels

Rear
Tires & Wheels

Front Wheel
Studs & Nuts

Rear Wheel
Studs & Nuts

Tire Pressure
Monitoring System

Rear Tire & Wheel

Back

Home

Chromazome Steel Wheel
Part# 1490-6946
22.5/24 10 hole 7MM / 9.38 Backset

Vredistein Tire Part #1490-6202
710/45 - 22.5 (inflate to 60psi)

Tire & Wheel Combo
Part# 1490-6762

Front Tire & Wheel

Back

Home

Chromazone Steel Wheel
Part# 1490-7014
22.5/20 10 hole 7MM
12.75 Backset (Hub Pilot)

Michelin Cargo X-Bib Tire
Part #1490-7013
600/50 - 22.5

Tire & Wheel Combo
Part #1490-6962

Tire Pressure Monitoring System

Back

Home

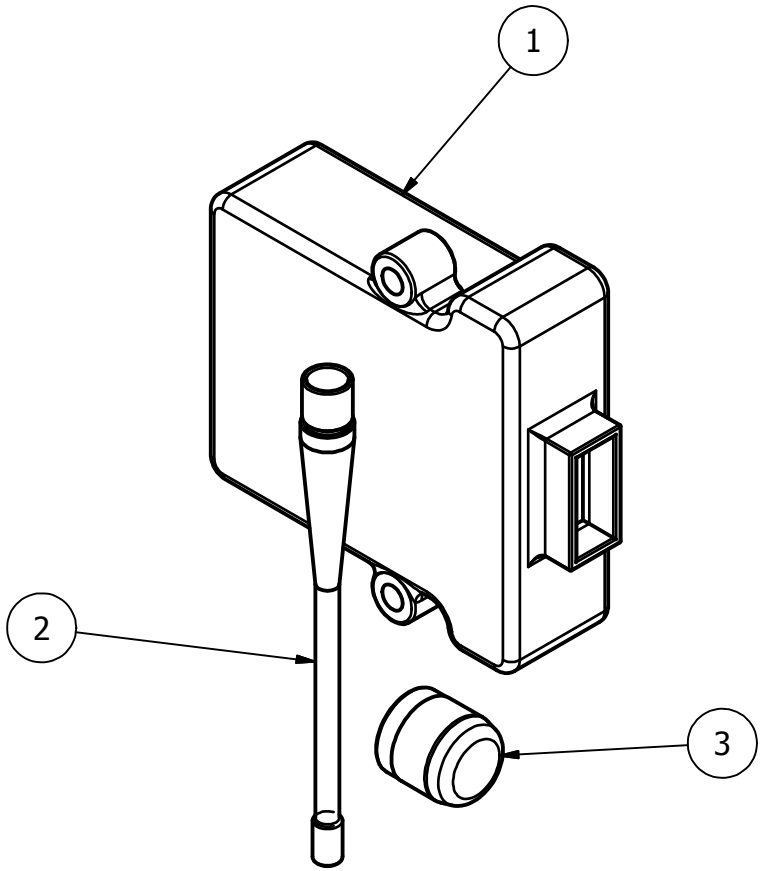

PARTS LIST			
ITEM	QTY	PART NUMBER	DESCRIPTION
1	1	1490-6054	Tire Pressure J1939 Gateway
2	1	1490-6057	7" Antenna for Tire Pressure Gateway
3	1	1490-5780	Tire Pressure Sensor 2.0

Glass & Seals
Gen 4 Able Cab

Unit # A1016-A1045

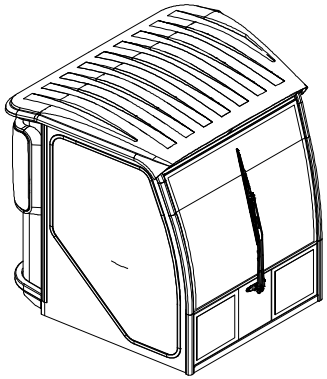

1490-6535 Windshield for Able Cab
Unit #798-Later
Manufacturer Part # 173-5100

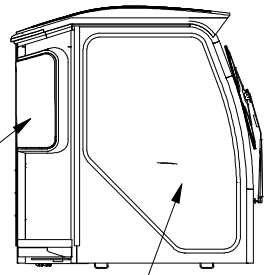

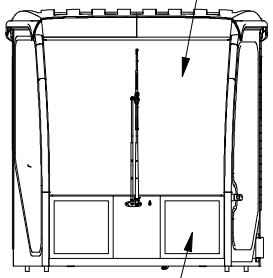

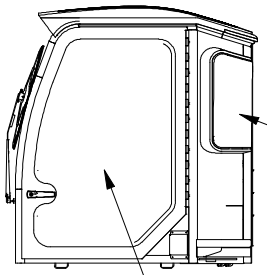

1490-7020 RH Rear Corner Glass
Manufacturer Part # 173-5106
1490-7866 Kit Glass, Bolt in seal

1490-7019 LH Rear Corner Glass
Manufacturer Part # 173-5105
1490-7866 Kit Glass, Bolt in seal

1490-7012- Side Glass RH
Manufacturer Part # 173-5102
14907724 Rubber Window Trim
Manufacturer Part # 284A-0051

1490-7503 Door Glass Gen 4 Able Cab
Manufacturer Part # 173-5101 R1
1490-7724 Rubber Window Trim
Manufacturer Part # 284A-0051

1490-6536 Lower Front Glass Both Sides
Manufacturer Part # 173-5104

28" Wiper Blades 1490-6520

Glass & Seals
Gen 3 Able Cab

Units #A1004-A1015

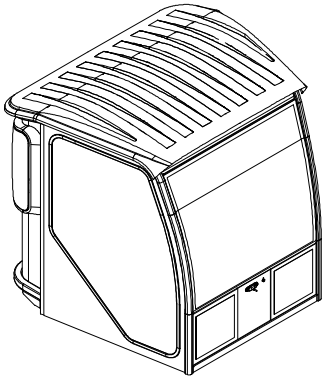

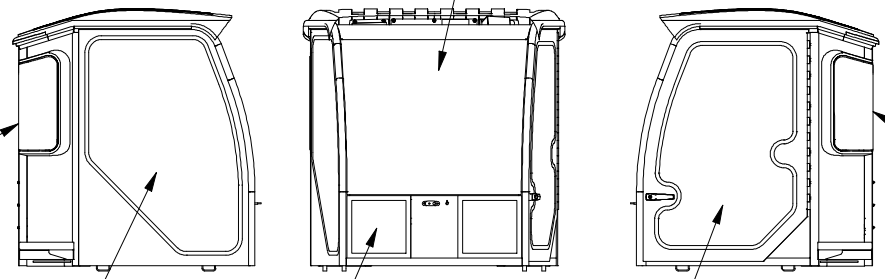

1490-6535 Windshield for Able Cab
Manufacturer Part # 173-5100

1490-7020 RH Rear Corner Glass
Manufacturer Part # 173-5106
1490-7866 Kit Glass, Bolt in seal

1490-7019 LH Rear Corner Glass
Manufacturer Part # 173-5105
1490-7866 Kit Glass, Bolt in seal

1490-7012- Side Glass RH
Manufacturer Part # 173-5102
14907724 Rubber Window Trim
Manufacturer Part # 284A-0051

1490-7011 Door Glass Gen 3 Able Cab
Units #798-819
extra cutout on back side
Manufacturer Part # 173-5101 R0

1490-6536 Lower Front Glass Both Sides
Manufacturer Part # 173-5104

28" Wiper Blades 1490-6520

Engine Coolant
MTU 1300

Zerex G40 Antifreeze T4 MTU Engine, Coolant.....1490-7197

Coolant Change 75 qts Every 2000 hrs

50/50 Coolant/Antifreeze

Exhaust Sensors

Sencor B-72.....1490-7658
Sencor, SCR Mixing Tube Temp.....1490-7559
Nox Sensor downstream catalytic converter.....1490-7403
Sensor Exhaust, After Nox.....1490-7659
Nox Sensor Exhaust gas after treatment unit inlet a70.....1490-7402
Sensor Raw NOX, Turbo Oultet. Black Plug.....1490-7599
Temp. Sensor, B-73 temp-Out Sensor.....1490-7657
Pump, DEF. MTU 1100 & 1300. Units A1013-A1045.....1490-7619

Stinger 8500 Stacker

Headlight & Housing

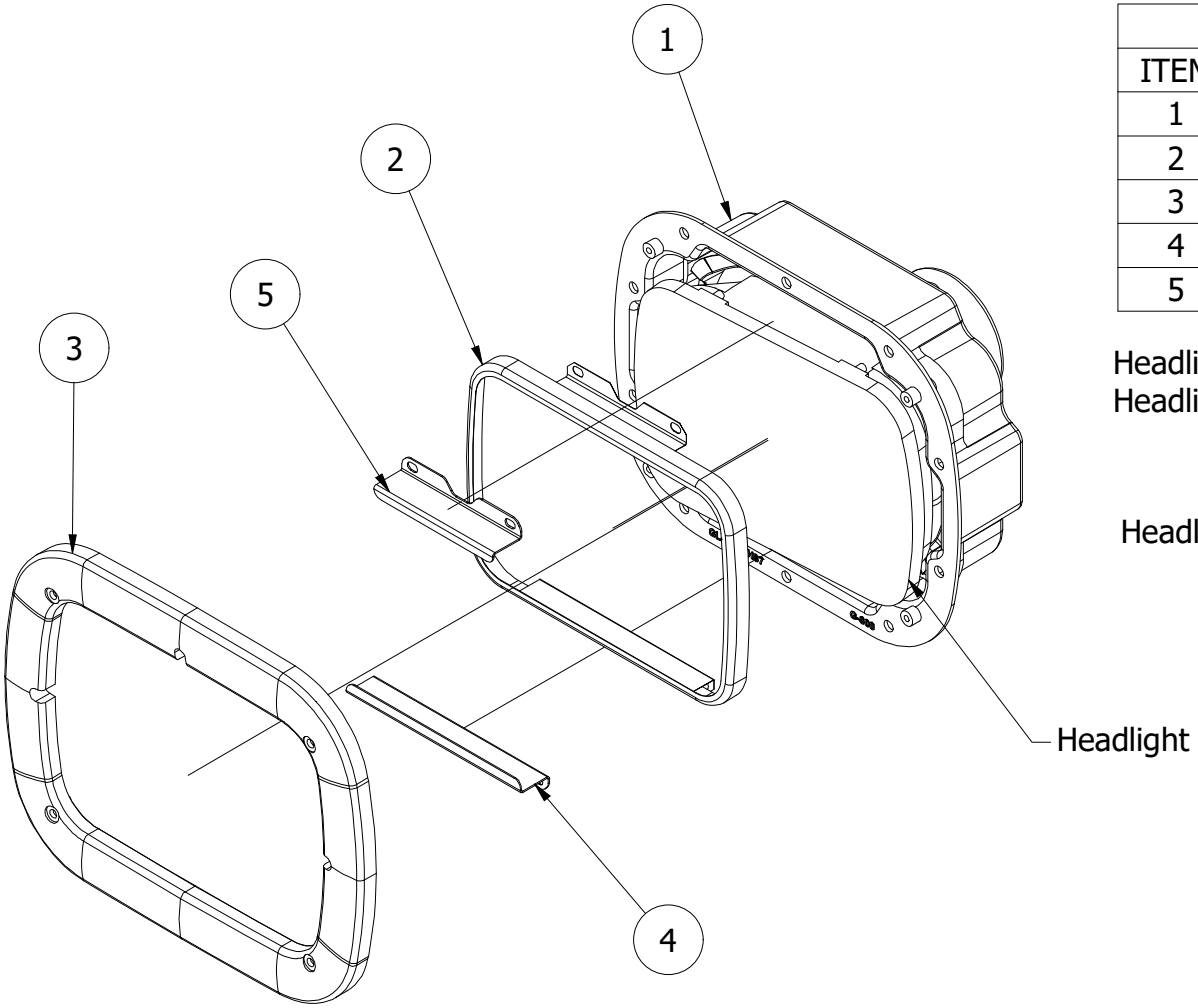

PARTS LIST			
ITEM	QTY	PART NUMBER	DESCRIPTION
1	1	1490-5618	Headlight Housing
2	1	1490-7419	Headlight Retaining Ring
3	1	1490-5427	Chrome Ring Bezel
4	1	8570-532	Headlight Saver Tab Lg
5	1	8570-533	Headlight Saver Tab Sm

Headlight LED 5X7 Real Lux for new Trucks.....1490-7429
Headlight Hallogen Bulb For old Trucks.....1490-5931

Headlight Plate.....1490-6886

Stinger 8500 Stacker

8500 Door Assy RH

UNITS: A1025 - A1045

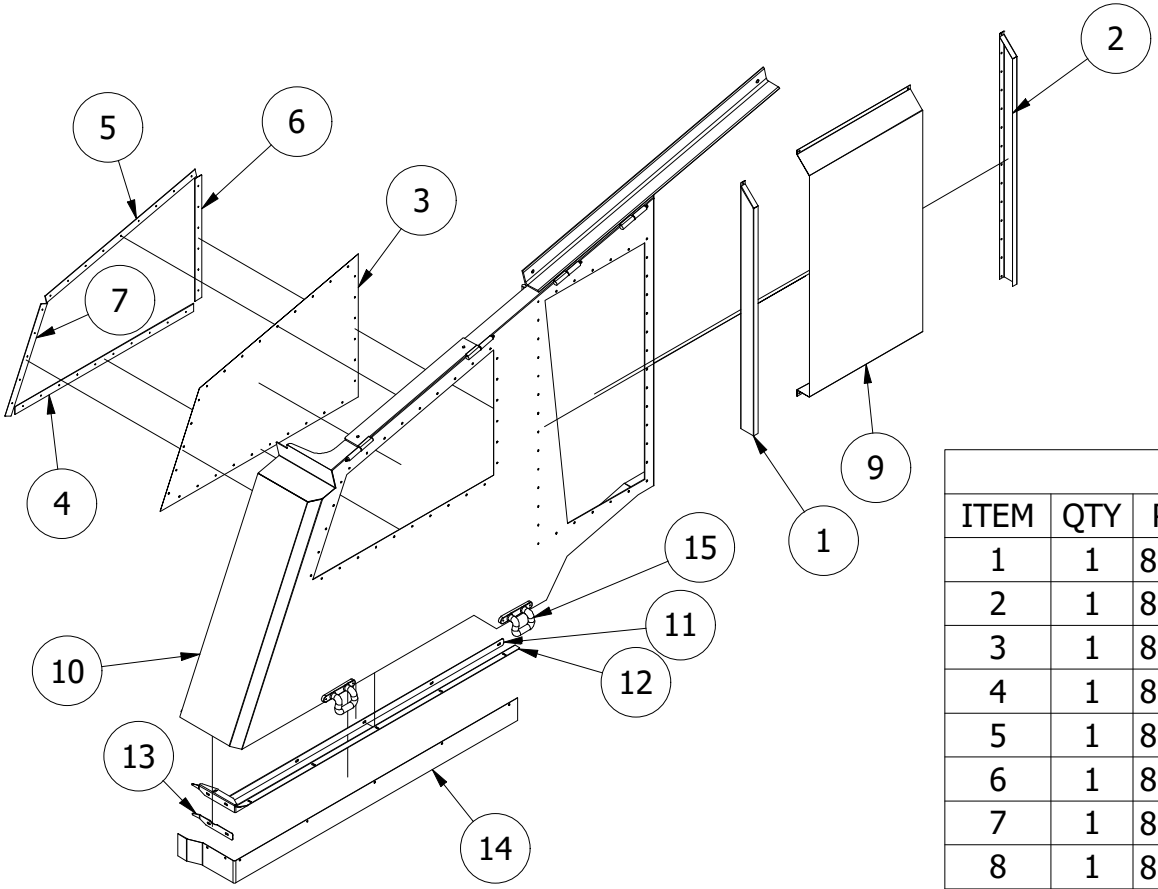

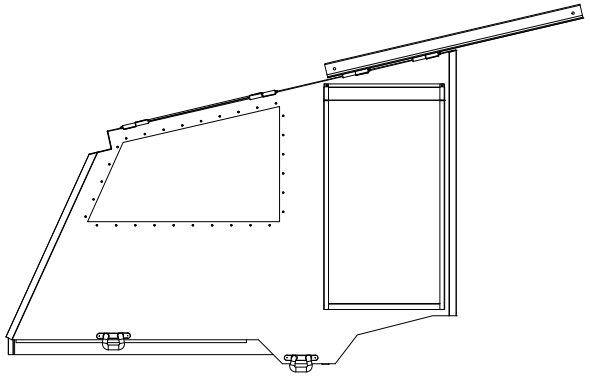

UNITS A1013 -A1024

PARTS LIST			
ITEM	QTY	PART NUMBER	DESCRIPTION
1	1	8570-138	8500 RH Screen Closure
2	1	8570-139	8500 LH Screen Closure
3	1	8570-136	8500 Rear Door Screen
4	1	8570-183	8500 Door Screen 10-Hole Strap
5	1	8570-184	8500 Door Screen 9-Hole Strap
6	1	8570-185	8500 Door Screen 6-Hole Strap
7	1	8570-186	8500 Door Screen 5-Hole Strap
8	1	8500 Door Seal	Trim Bulk Straight 8500 Door Seal
9	1	8570-137	8500 Front Door Screen
10	1	8570A75	8500 RH Door Assy
11	1	8570-497	Main Backer Strip, RH Door Seal
12	1	8570-499	Brkt, RH Door Seal Mount
13	1	8570-498	Rear Backer Strip, RH Door Seal
14	1	8570-520	Seal Nylon, RH engine door
15	2	1490-4243	Molded Grab Handle

(8570A82 Door Seal Kit)

8500 Door Assy

UNITS: A1013-A1024

Back

Home

Left & Right Door Assemblies Similar

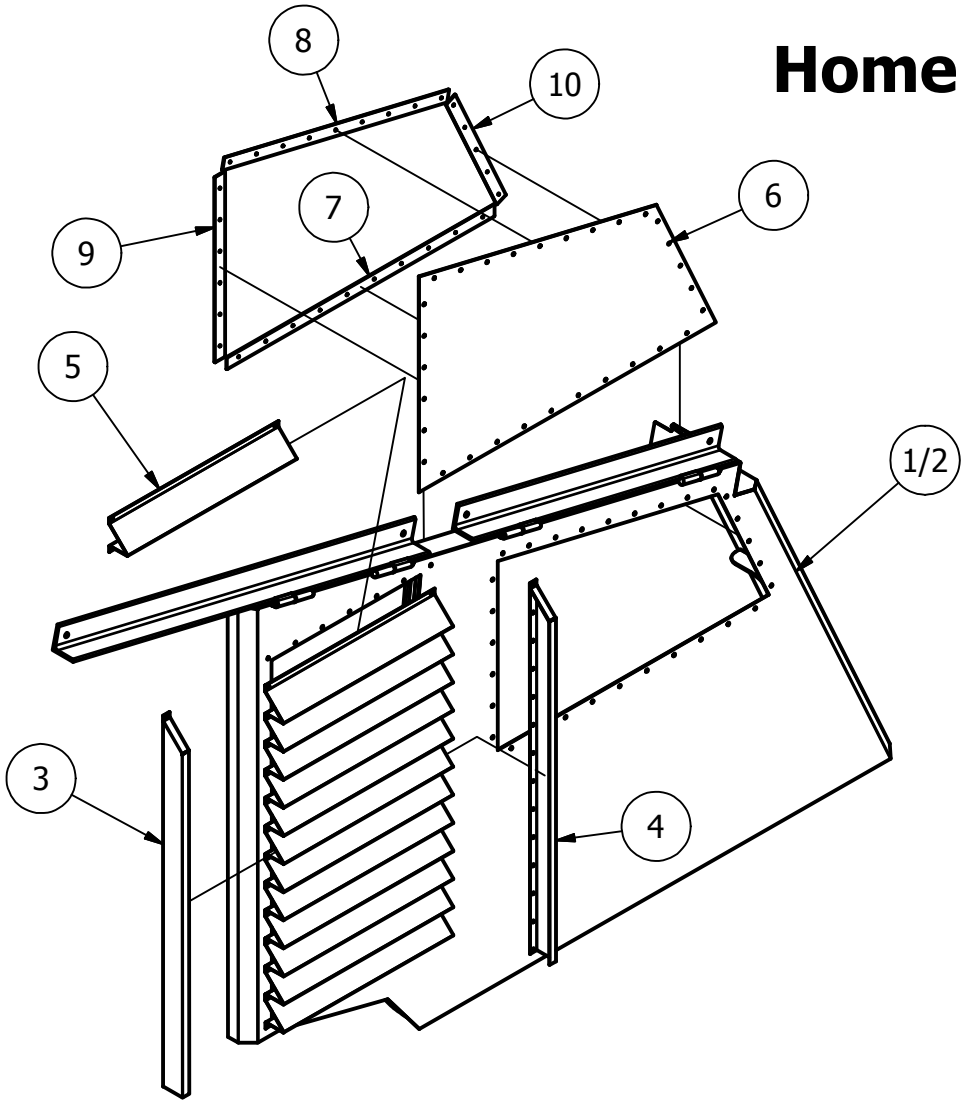

PARTS LIST			
ITEM	QTY	PART NUMBER	DESCRIPTION
1	1	8570A24	LH Door Weldment
2	1	8570A23	RH Door Weldment
3	1	8570-138	8500 RH Screen Closure
4	1	8570-139	8500 LH Screen Closure
5	13	8570-135	8500 Corrugated Door Screen
6	1	8570-136	8500 Rear Door Screen
7	1	8570-183	8500 Door Screen 10-Hole Strap
8	1	8570-184	8500 Door Screen 9-Hole Strap
9	1	8570-185	8500 Door Screen 6-Hole Strap
10	1	8570-186	8500 Door Screen 5-Hole Strap