Directory

Stinger 6500 Stacker

Parts Manual
2021 to 2024
(Joystick & Montor)
S/N 866-3007

Other Documents

Index

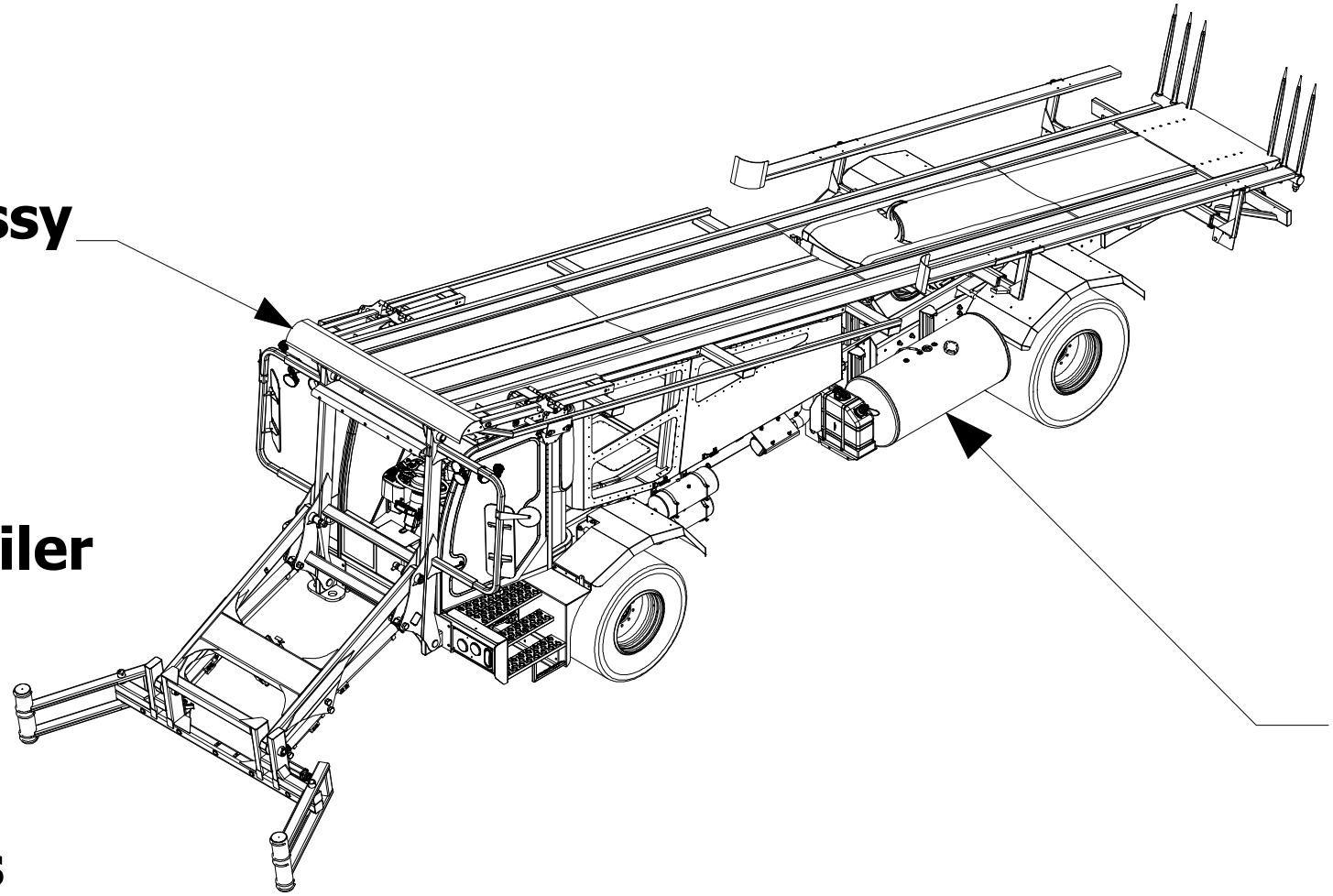

Unit Assy

Filters & Belts

Fluids

Bale Oiler

Chassis

Lights

Other Documentation

These files will open in a new window

Back

Home

Allison Owners Manual

CCC Parts Manual

Allison Service Manual

CCC Service Manual

Cleanfix Parts Manual

Cummins Website

Stinger 6500 Stacker
Index

Back

Home

Control Valves

Hydraulic Cylinders

Frontend

Stackframe

Main Slide

Doors

Control Valves Locations

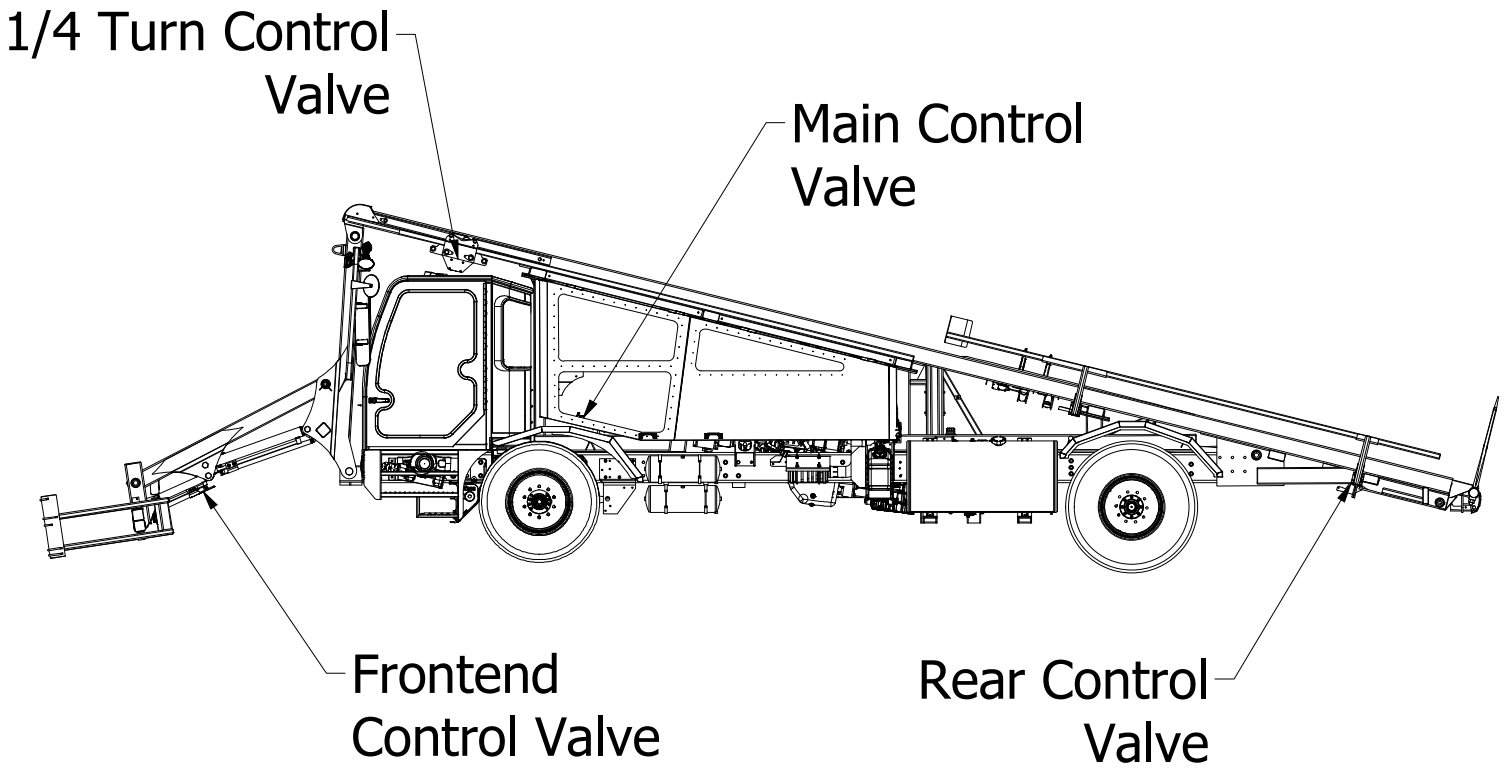

Light Index

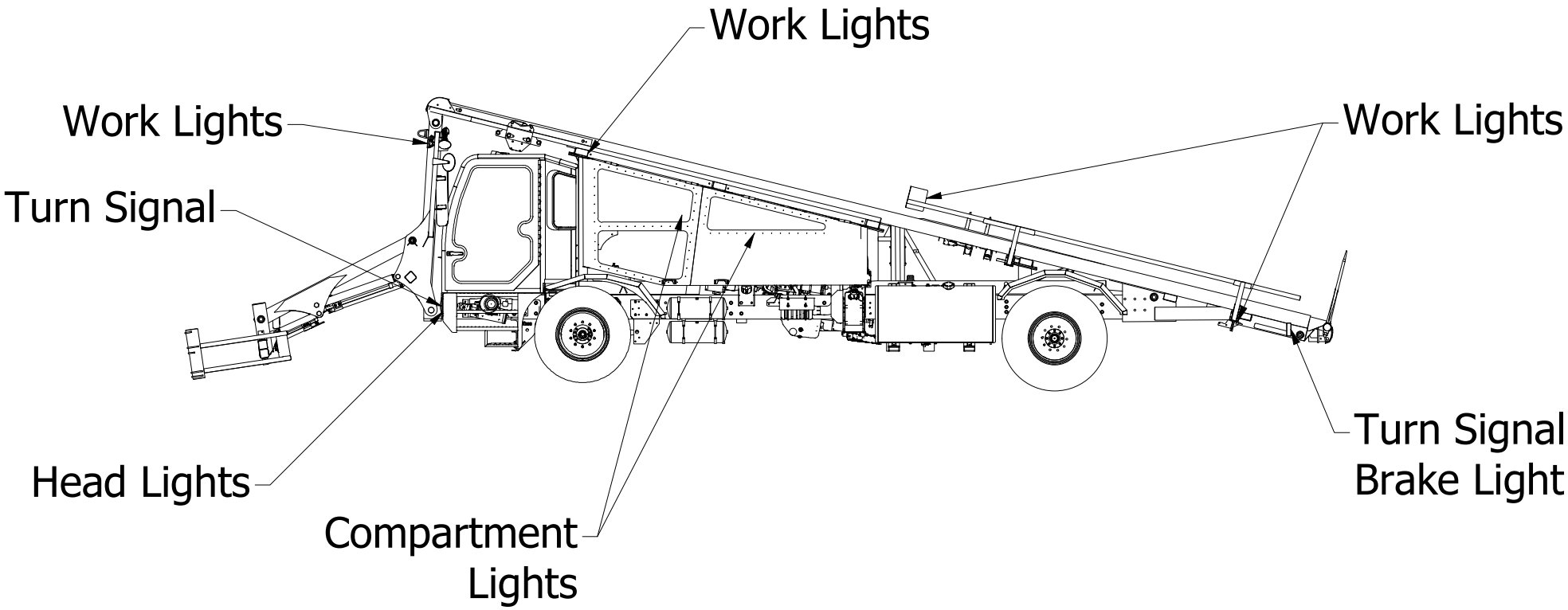
Work Lights
Work Lights
Work Lights
Turn Signal
Head Lights
Compartment Lights
Turn Signal Brake Light

Hydraulic Cylinder Index

Back

Home

Front Cylinders

Rear Cylinders

Fluids Index

Back

Home

Power Steering

Engine Oil

Hydraulic Oil

Rear Differential

Transmission Oil

Bale Oiler

Power Steering Fluids

Back

Filter part #1490-5469

(Nelson #83804E....Donaldson #P550637)
Change filter after 250 hrs and every 1000 hrs thereafter

Home

10 qts fills the system

Approved Hydraulic Fluids

Automatic Transmission Fluid Dexron II
Automatic Transmission Fluid Type "E" or "F"
Chevron 10W-40
Chevron Custom 10W-40 Motor Oil
Chevron Torque 5 Fluid
Exxon Nuto H32 Hydraulic Fluid
Fleetrite PSF (Can #990625C2)
Ford Spec. M2C138CJ
Mack EO-K2 Engine Oil
Mobil ATF 210
Mobil Super 10W-40 Motor Oil
Premium Blue 2000 - SAE 15W-40
*Shell Rotella T30W
*Shell Rotella T SAE 30
Texaco 10W-40
Texaco TL-1833 Power Steering Fluid
Union 10W-40
Union 15W-40
Unocal Guardol 15W-40 Motor Oil

The steering system should be kept filled with one of the above fluids. Fluids marked with an asterisk (*) have not been approved for use with TRW's pump.

⚠ WARNING **Completely flush the steering system with one of the recommended fluids above only. Do not mix oil types. Any mixture or any unapproved oil could lead to seal deterioration and leaks. A leak could ultimately cause the loss of fluid, which could result in a loss of power steering assist.**

Rear Differential Oil

Back

Home

The Rear differential uses 85/140 gear lube

It takes 39 pints to fill the system

Change oil after the first 250 hrs

and every 12 months thereafter

Hydraulic Oil

Back

Home

Filter #1490-5214

(Donaldson #P16-5878)

Hydraulic oil should have an ISO AW-46 rating

(Approx. 73 gallons fills the system)

John Deer Hy-Guard & CIH Hy-Trans work fine

Change filter every 12 months

Transmission Oil

Back

Home

Filter #1490-4598

(Allison #29548988.....Donaldson #P560971)

Transmission Oil should be Allison approved

(T.E.S. 295)

Initial fill 32 qts, Refill 22 qts

Change the filter at 200 hrs then
Change Oil/Filter every 3000 hrs for synthetic Oils

Partial List of
T.E.S. 295 Oils

Engine Oil

Back

Home

Filter #1490-5208

(Fleetguard #LF3000.....Donaldson #P553000)

Oil Change 20 qts

Change oil/filter every 500 hrs

Belts & Filters

Back

Filters

Home

Engine Oil Filter.....1490-5208 (Fleetguard #LF3000...Donaldson #P553000)
Fuel Filters.....1490-7034 (Fleetguard #FF63009)
.....1490-7035 (Fleetguard #FS1098)
Transmission Filter.....1490-4598 (Allison #29548988...Donaldson #P560971)
Engine Air Filter.....1490-6942 (Donaldson #P131280)
.....1490-6943 (Donaldson #P118216)
Hydraulic Oil Filter.....1490-5214 (Donaldson #P16-5878)
Power Steering Filter.....1490-5469 (Nelson #83804E...Donaldson #P550637)
A/C Filters
Recirculate Filter (Inside).....1490-7737 (Badger BT8-1037)

Belts

Serpentine (Fan Belt)
S/N 813-Later.....1490-7375 (Cummins #3289746...Gates # K080785HD)
A/C Belt
S/N 814-Later ...1490-7376 (Gates #9370)

Belt Routing

More Information **Fluid Index**

Cummins 8.3L Serpentine Belt Route

(All Models)

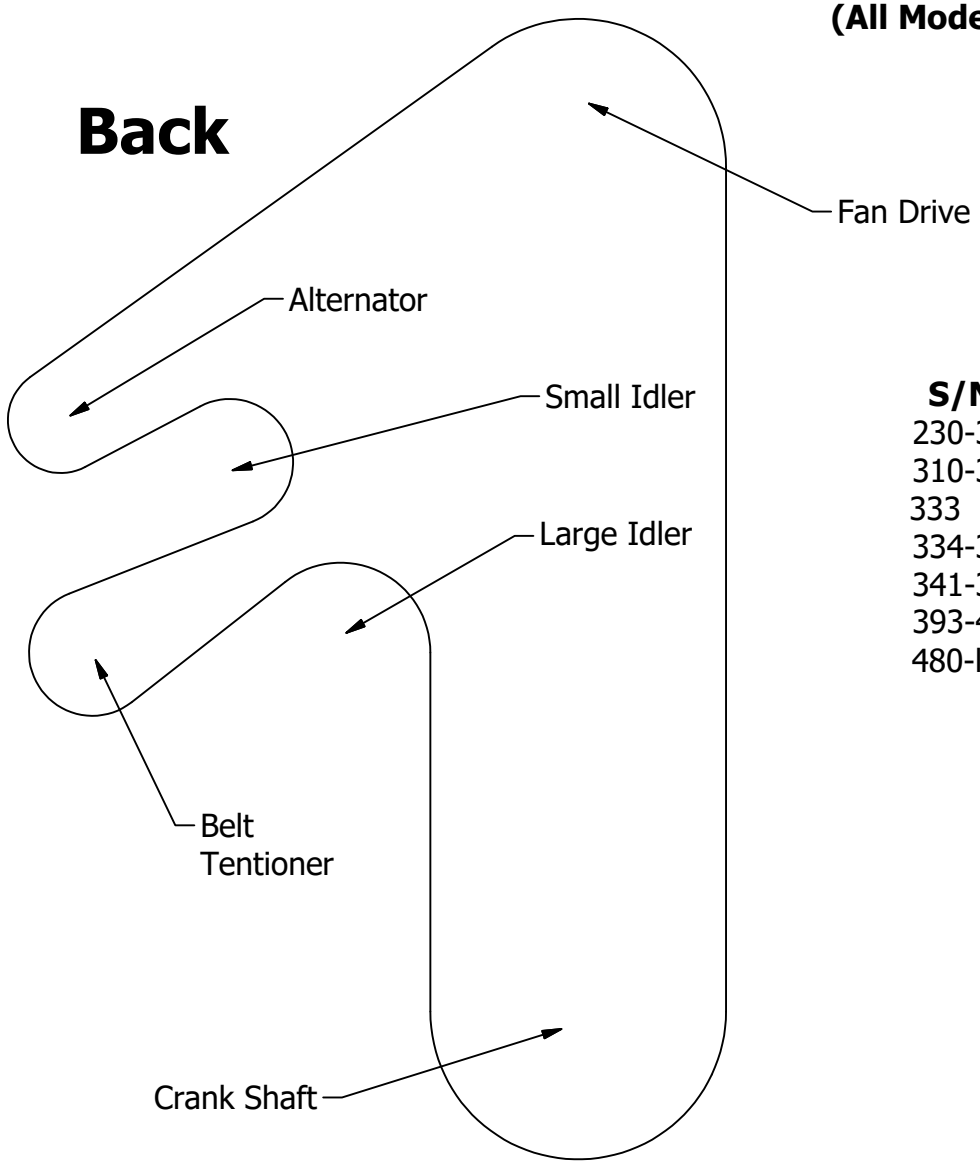

Serpentine Belt

S/N	Cummins	Dayco	Stinger	NAPA
230-309	3926861	5080725	1490-5215	25-080726
310-332	3289686	5080765	1490-4641	25-080765
333	3972262	5080770	1490-4645	25-080774
334-340	3289686	5080765	1490-4641	25-080765
341-392	3972262	5080770	1490-4645	25-080774
393-479	3972379	5080895	1490-5672	25-080893
480-later	3974248	5080925	1490-5985	25-080922

A/C Belt

S/N	Gates	Dayco	Stinger
230-309	9395	17395	1490-5216
310-479	9412	17410	1490-5212
480-Later	9395	17395	1490-5216

T. E. S. 295 Approved
Transmission Oils

Back Home

Marketer	Brandname
Castrol	Transynd
BP Lube	Autran Syn 295
Cognis	Emgard 2805
International	Fleetrite Synthetic ATF
ExxonMobile	Delvac Sybthetic ATF
John Deere	HD SynTran
Volvo	Bulldog Synthetic ATF

Rear Cylinder Index

Back

Home

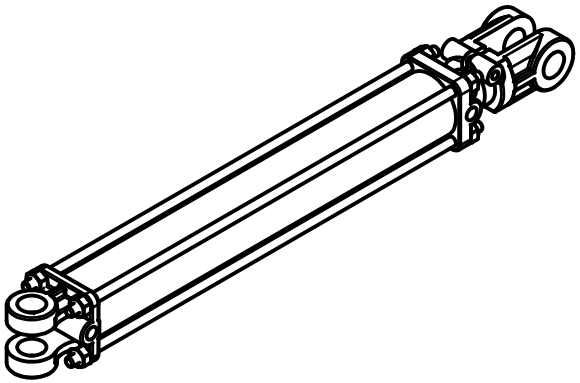

Hoist

Tailgate

Stackdown

Squeeze Rail

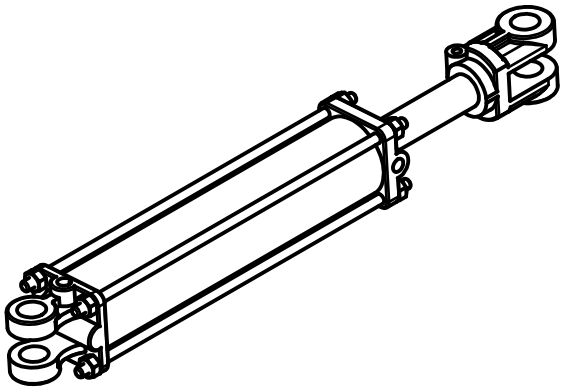

Bale Stop

Front Cylinder Index

Back

Home

Front Sqz

1/4 Turn

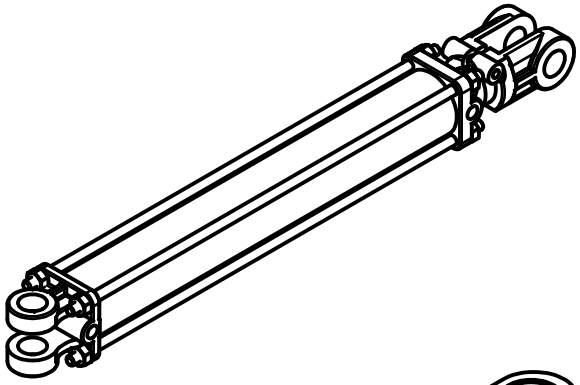

Front Tilt W/Sensor

Front Lift W/Sensor

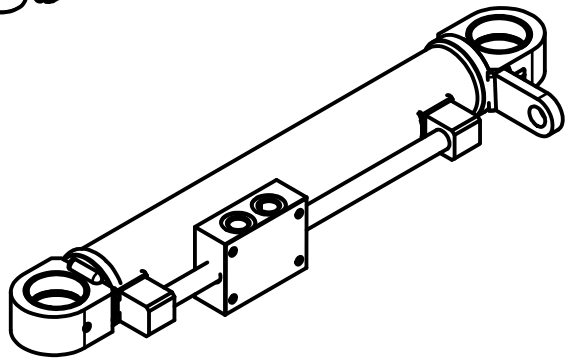

Front Tilt

Front Lift

CCC LE Hayloader Chassis

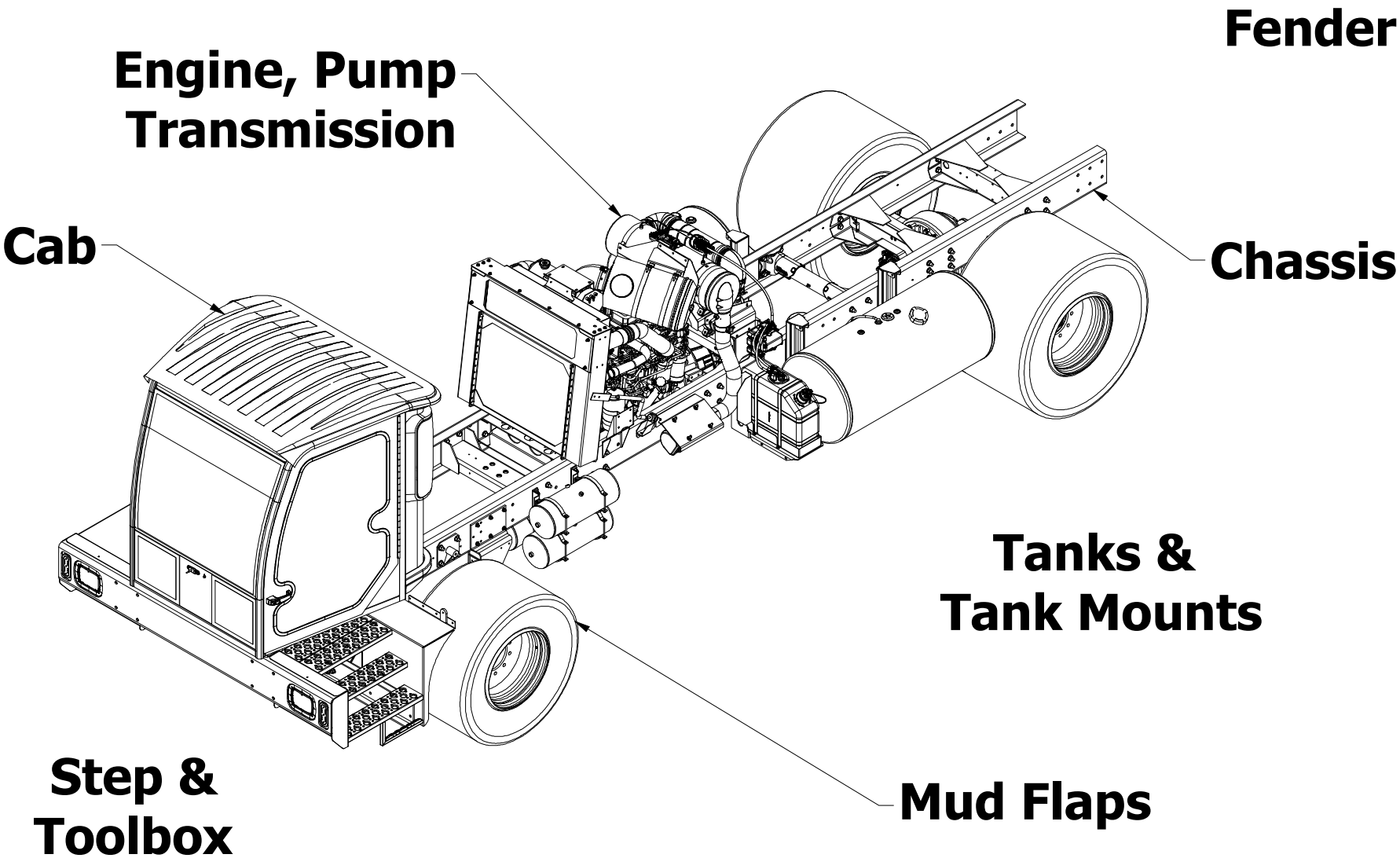

Front & Rear Fenders
S/N 798 & Newer

Back **Home**

LH Front Fender 2017A3

(LH shown: RH 2017A4)

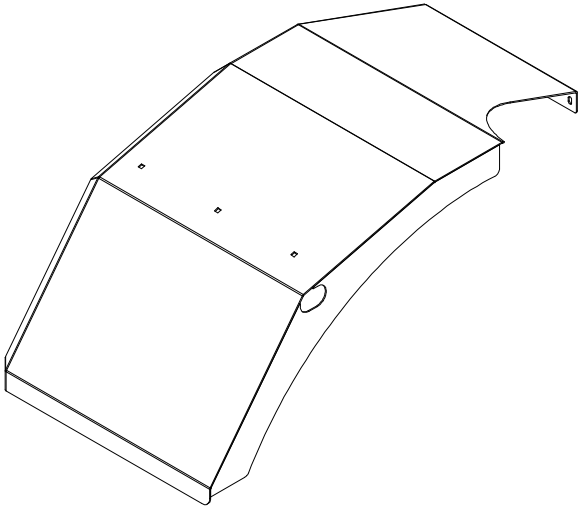

Front Fender Mount

2014A5 LH : 2014A6 RH

LH Rear Fender 2018A4

(LH shown: RH 2018A3)

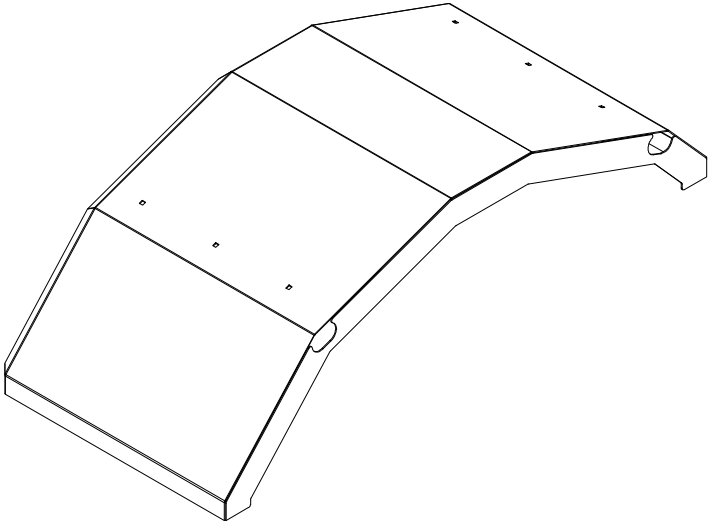

Rear Fender Mount

2014A7 LF/RR : 2014A8 RF/LR

Mud Flap Detail

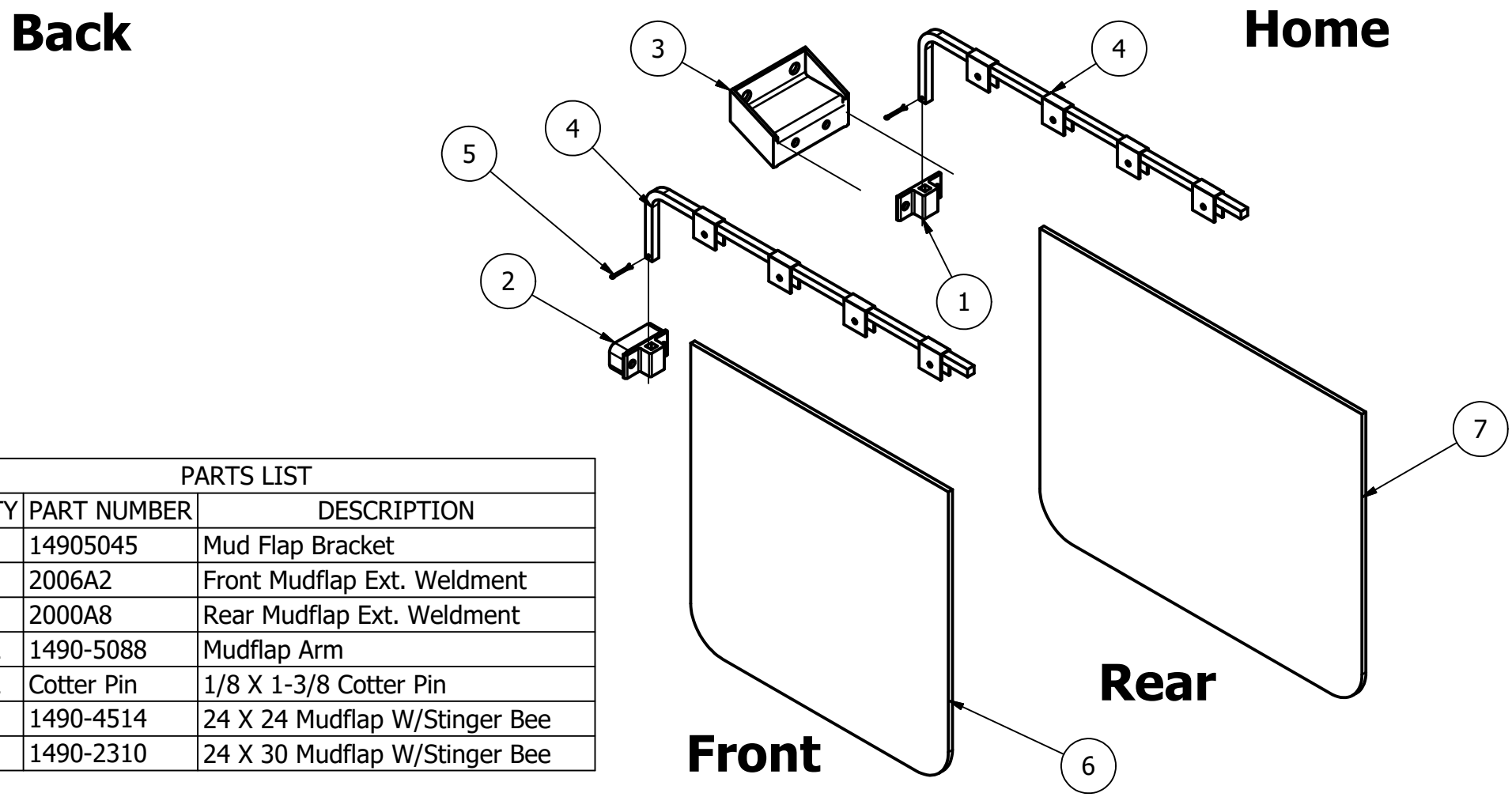

PARTS LIST			
ITEM	QTY	PART NUMBER	DESCRIPTION
1	1	14905045	Mud Flap Bracket
2	1	2006A2	Front Mudflap Ext. Weldment
3	1	2000A8	Rear Mudflap Ext. Weldment
4	2	1490-5088	Mudflap Arm
5	2	Cotter Pin	1/8 X 1-3/8 Cotter Pin
6	1	1490-4514	24 X 24 Mudflap W/Stinger Bee
7	1	1490-2310	24 X 30 Mudflap W/Stinger Bee

Stinger 6500 Stacker

Tier 4 Chassis Detail

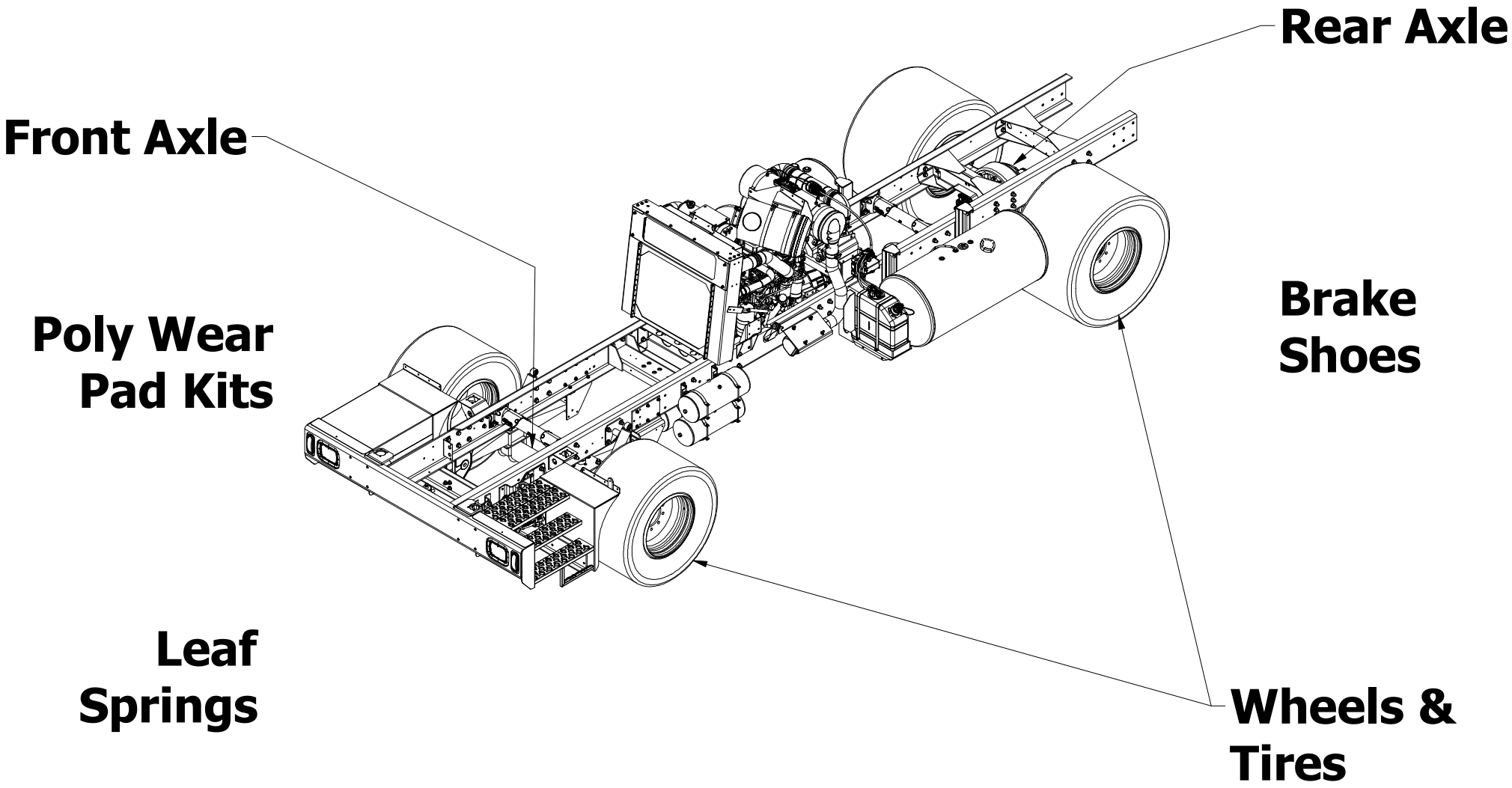

Stinger 6500 Stacker

Back

Home

Able Cab Elements
Gen 4

Joystick

Glass

Heating & A/C

Seat

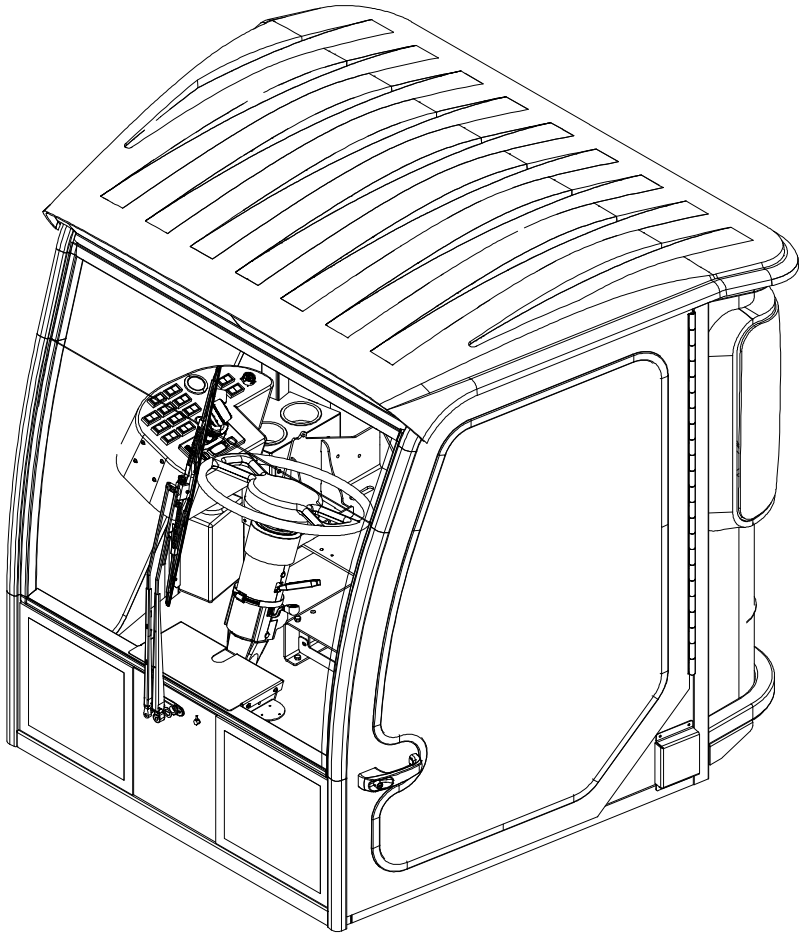

Trans
Shifter

Monitor

Engine & Transmission & Pump Components

Back

Home

Electrical

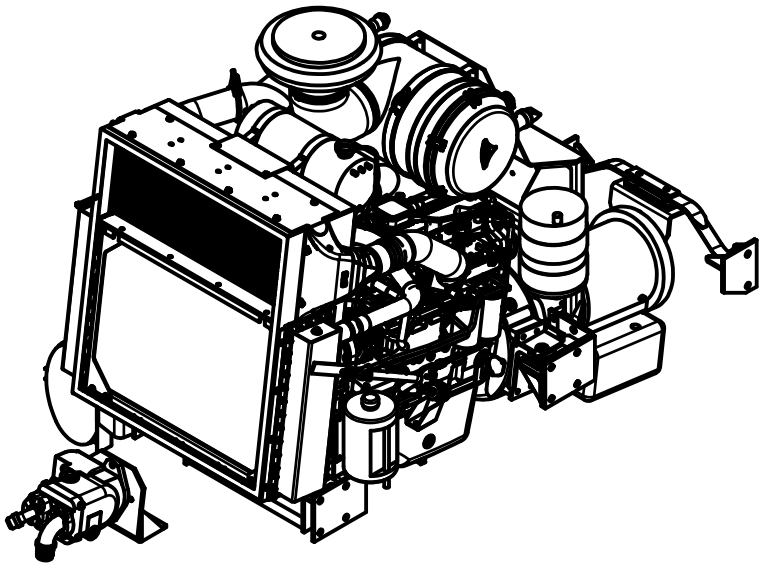

Transmission

Filters

Cooling System

Exhaust

Hydraulic Pump

Engine Exhaust

Back

Home

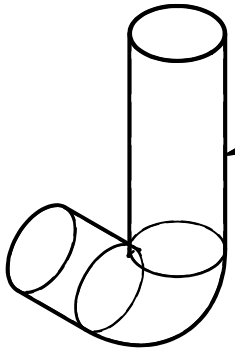

Turbo Exhaust Elbow Part #1490-6233

Exhaust V-Band Clamp Part #1490-5982

Turbo Exhaust Adapter Part #1490-6140

Engine Electrical

Back

Home

150 Amp Buzzanator Part #1490-4040

Main Disconnect Switch Part #1490-4911

Batteries are Group 31 (995 Cold Cranking Amps)

Engine Cooling System

Back Home

Recovery Tank (Plastic Tank Only no Sight Tube) **Part #1490-4626**
Recovery Tank Assy(Tank W/Mounts & Sight Tube) **Part #1490-4562**
Cap for the Recovery Tank Part #1490-4614
Sight Glass for the Surge Tank (Metal Tank) **Part #1490-5393**

Coolant should be replaced every 2000 hrs with a 50/50 mixture (50qts)

Transmission Components

Back

Home

Transmission is an Allison RDS 3000 6-speed

6-Speed Gen. 4 Shifter Part #1490-5295

(S/N 393 thru 759, No Pigtail)

6-Speed Gen. 5 Shifter Part #1490-6422

(S/N 760 on, No Pigtail, No Detent Spring)

Detent Spring for Shifter
Part #1490-5332

(Used on Gen 3 & Gen 4 Shifters)

Joystick Control

Hydraulic Pump Components

Back Home

PVG 100 Pump Part #1490-4132

Pump Seal Kit Part #1490-5480

Complete Pump Drive Shaft Part #1490-5532

1350 Pump Drive U-Joint Part #1490-5326

1350 Pump Drive U-Joint With Grease Zerk Part #1490-6788

1350 Pump Drive Engine Flange Yoke Part #1490-6390

1350 3-70-28X 1410 U-joint strap kit Part #1490-7264

1350 1-1/2' x 3-5/8' End Yoke Part #1490-4266

Joystick Control
Multifunctional CAN Bus Handle
1490-6584
S/N 866-Later

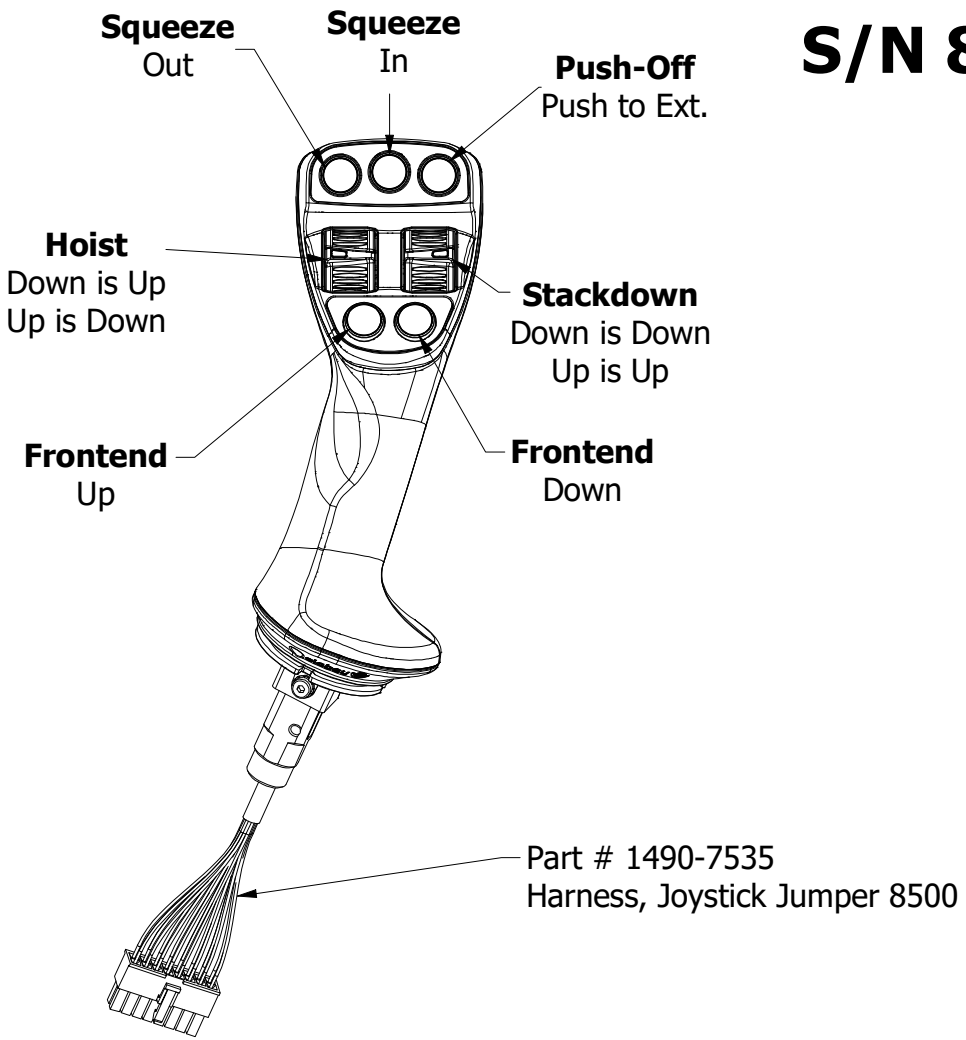

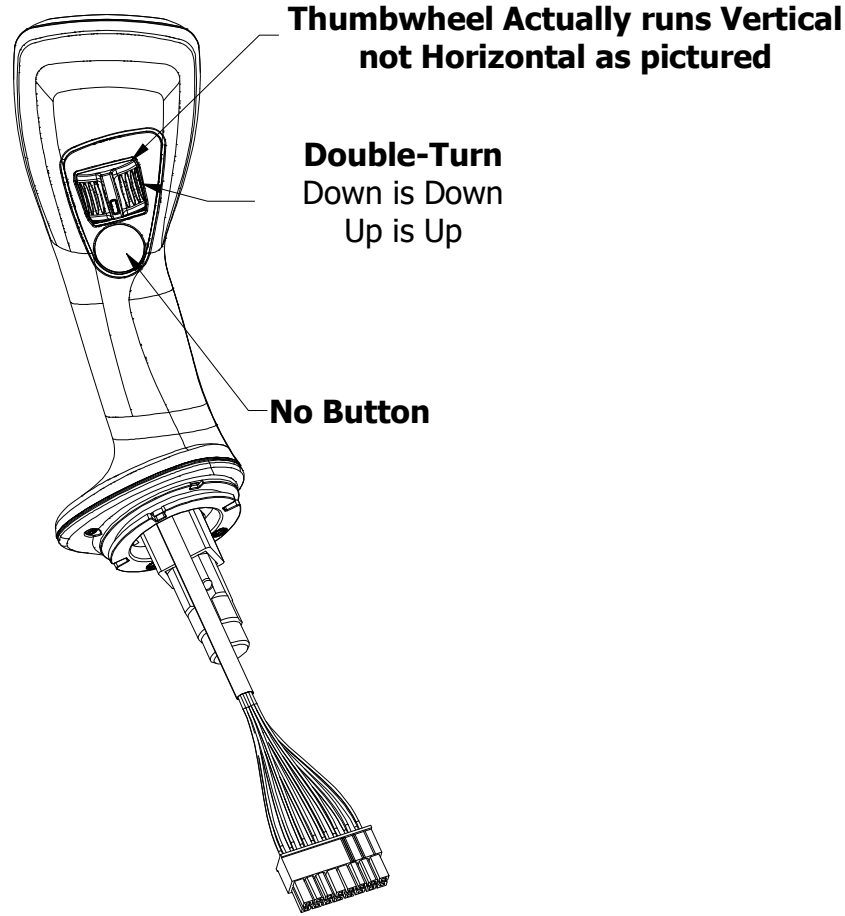

Seat Components

Back

Home

Standard SST Hi-Back Seat
W/ TLV Air Suspension
Part # 1490-5880

Adjustable Shock W/Control Cable
Part # 1490-5949

Seat Air Pump W/Brass Fittings
Part # 1490-5991

Non-adjustable Shock W/Bushings
Part # 1490-5948

Non-adjustable Shock Only
Part # 1490-5852

Stinger 6500 Stacker

(Unit Assembly)

Back **Home**

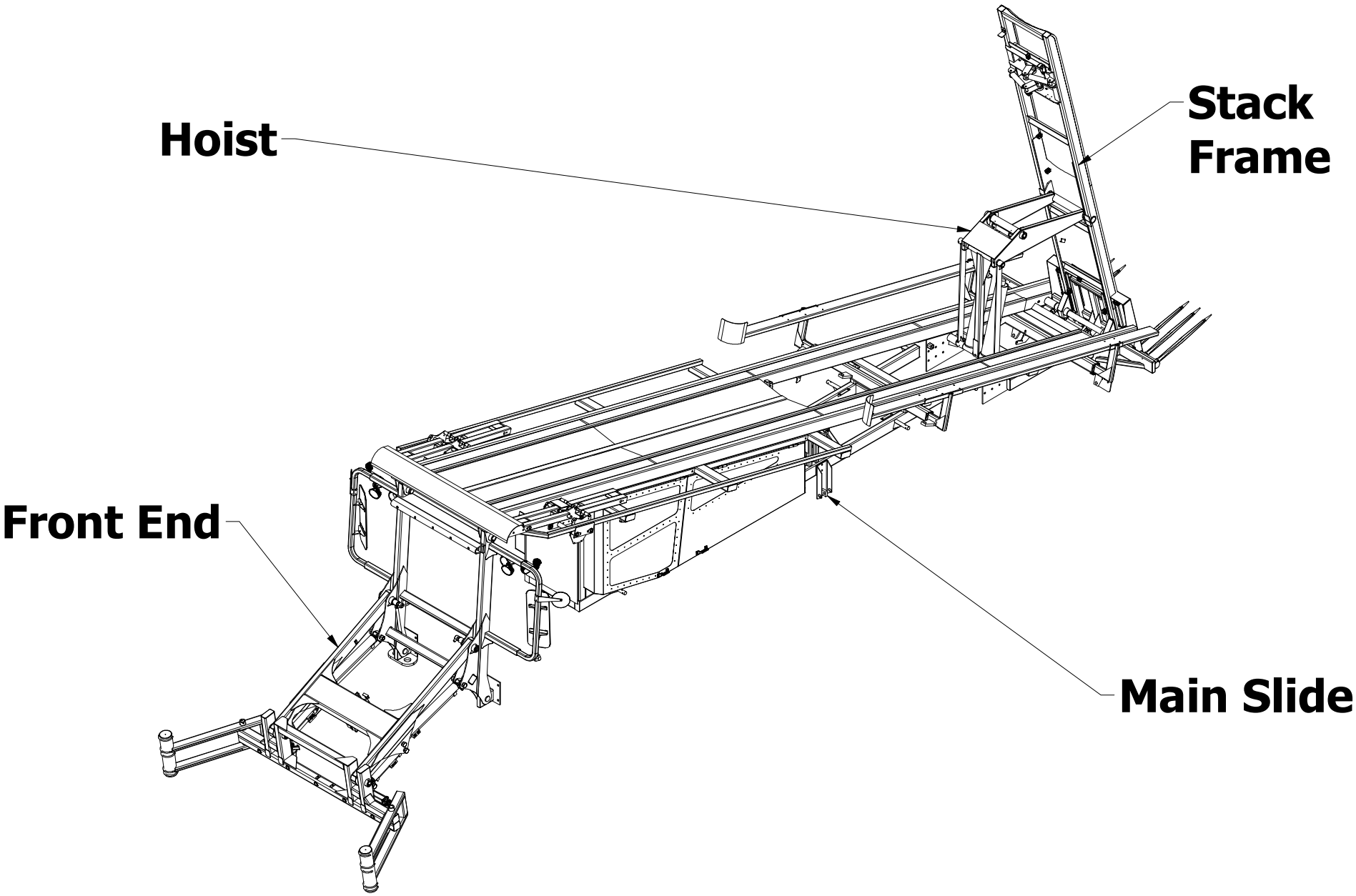

Main Slide Detail

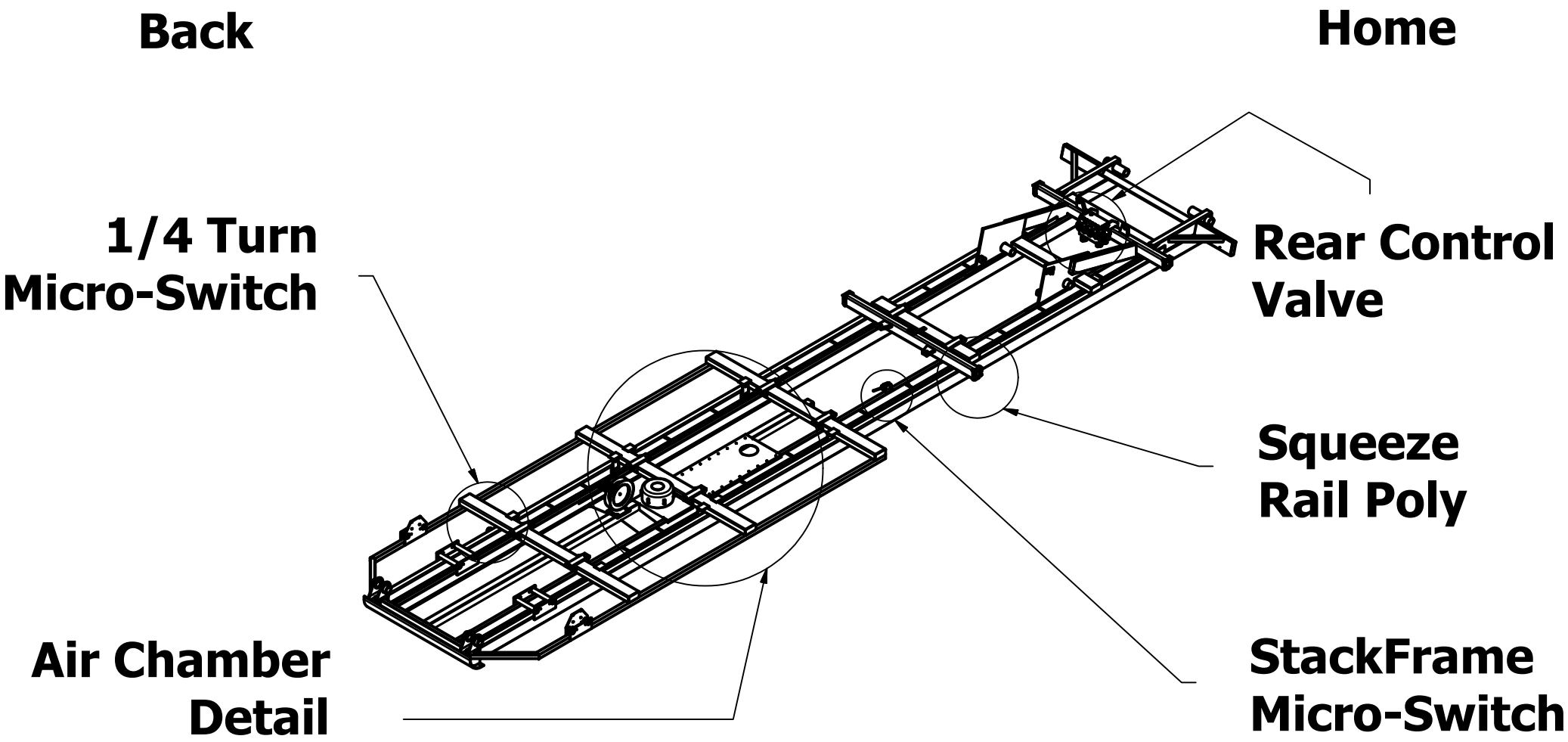

Main Slide Assembly
(Stacking Unit)

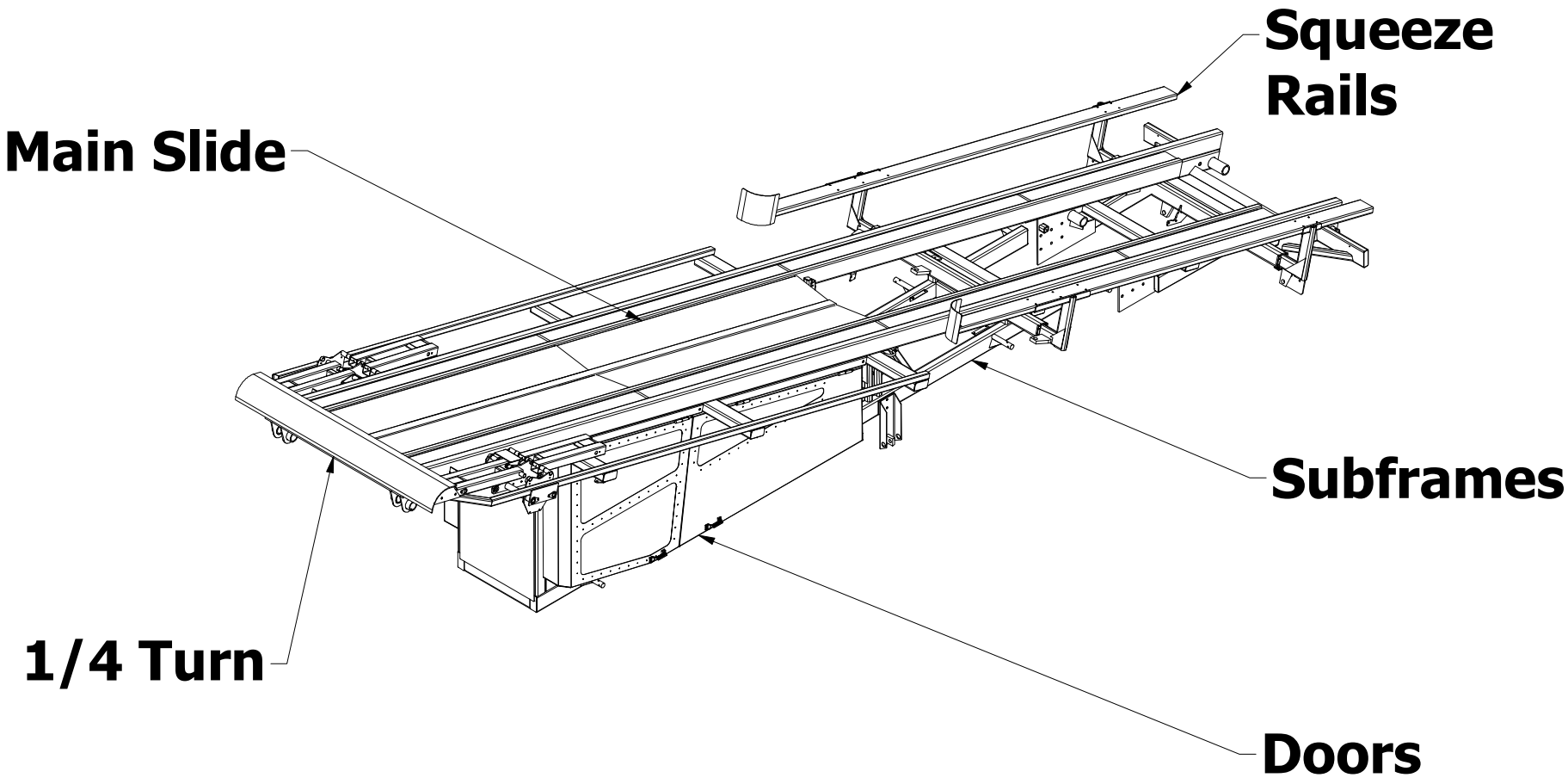

Squeeze Frontend

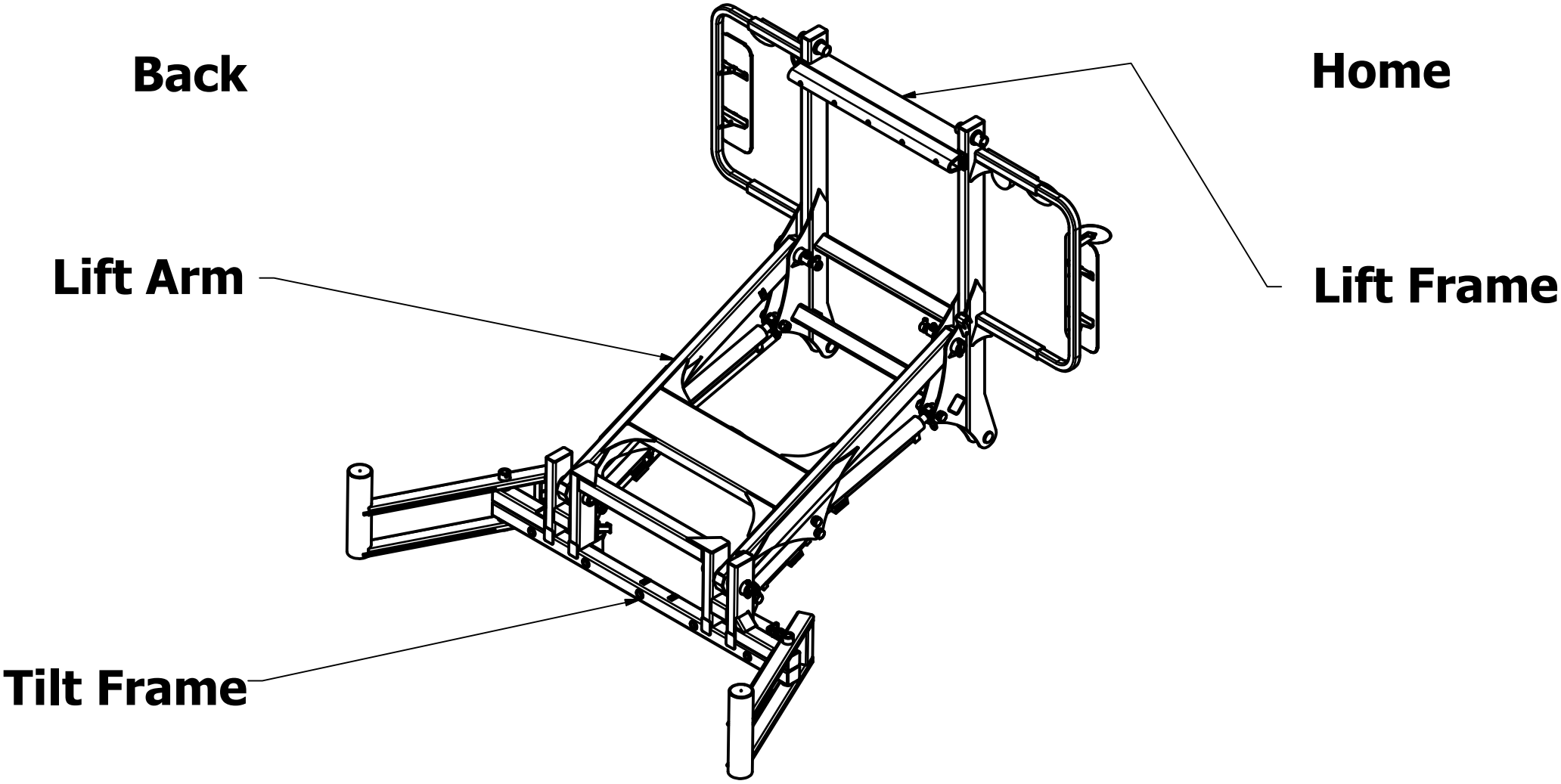

Lift Frame Assy 2

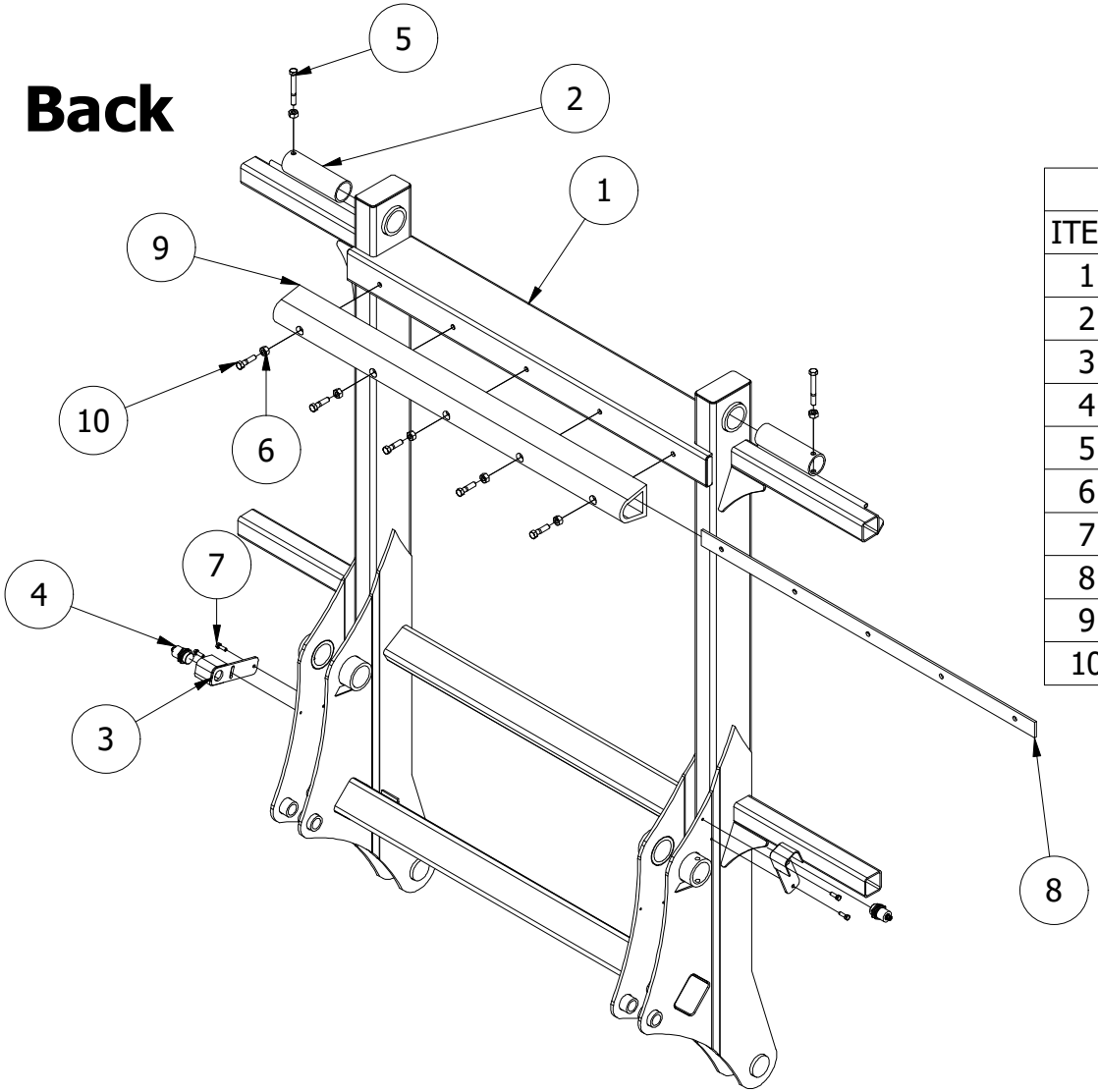

PARTS LIST			
ITEM	QTY	PART NUMBER	DESCRIPTION
1	1	5540A	Front Lift Frame
2	2	5540-118	Lift Frame Upper Pivot Shaft
3	2	1400-122	Shielded Prox Switch Mount
4	2	1490-5667	Prox Switch W/QD at switch
5	2	1/2-13 X 4	Hex Bolt
6	7	1/2-13 Nut	Hex Nut
7	4	5/16-18 X 1	Hex Bolt
8	1	5540-109	Rubber Bumper Strap
9	1	1490-5338	Rubber Bumper
10	5	1/2-13 X 2	Hex Bolt

Prox Wire 1490-5668

Front Lift Frame Assy

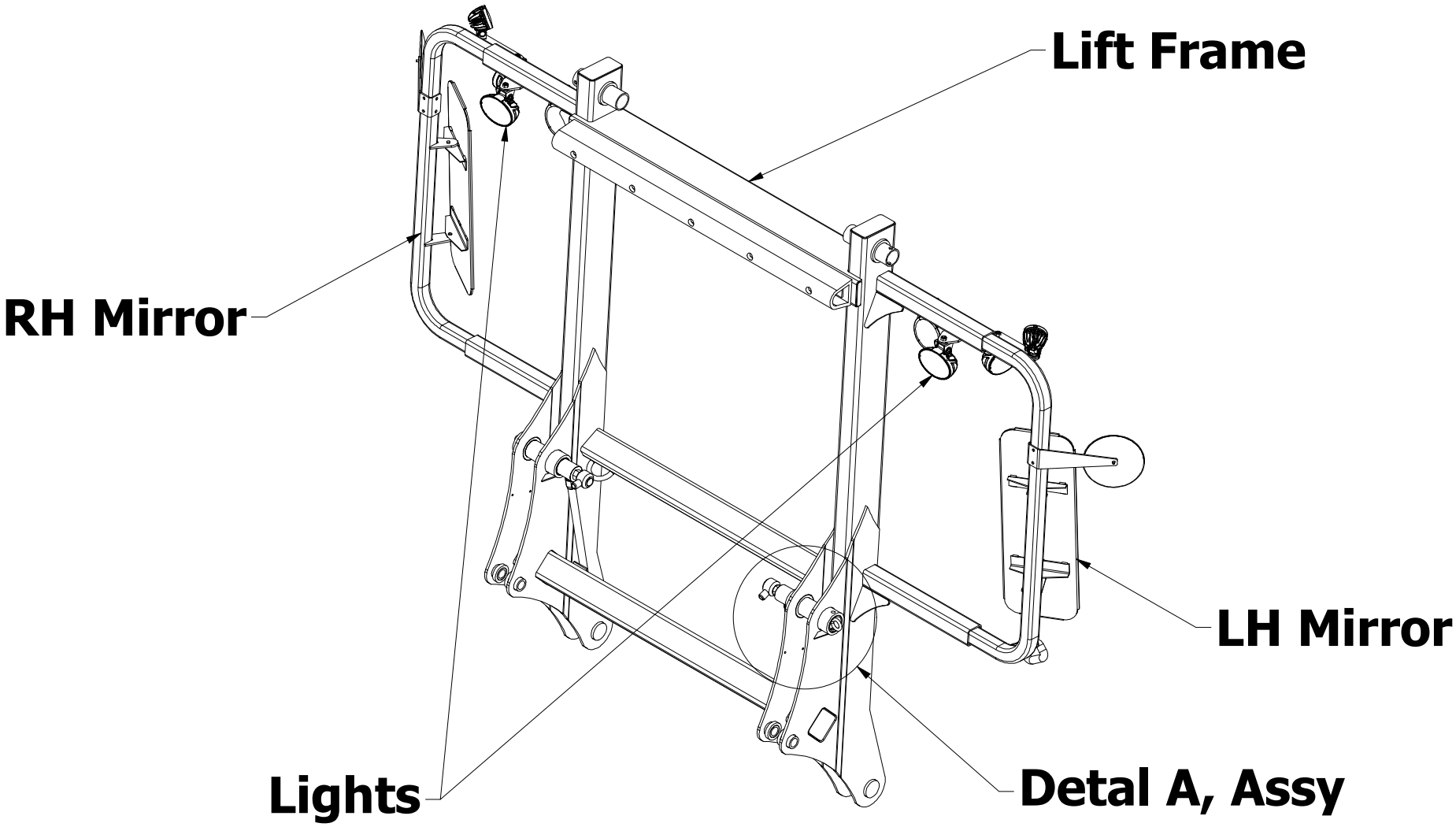

Lift Arm Assy

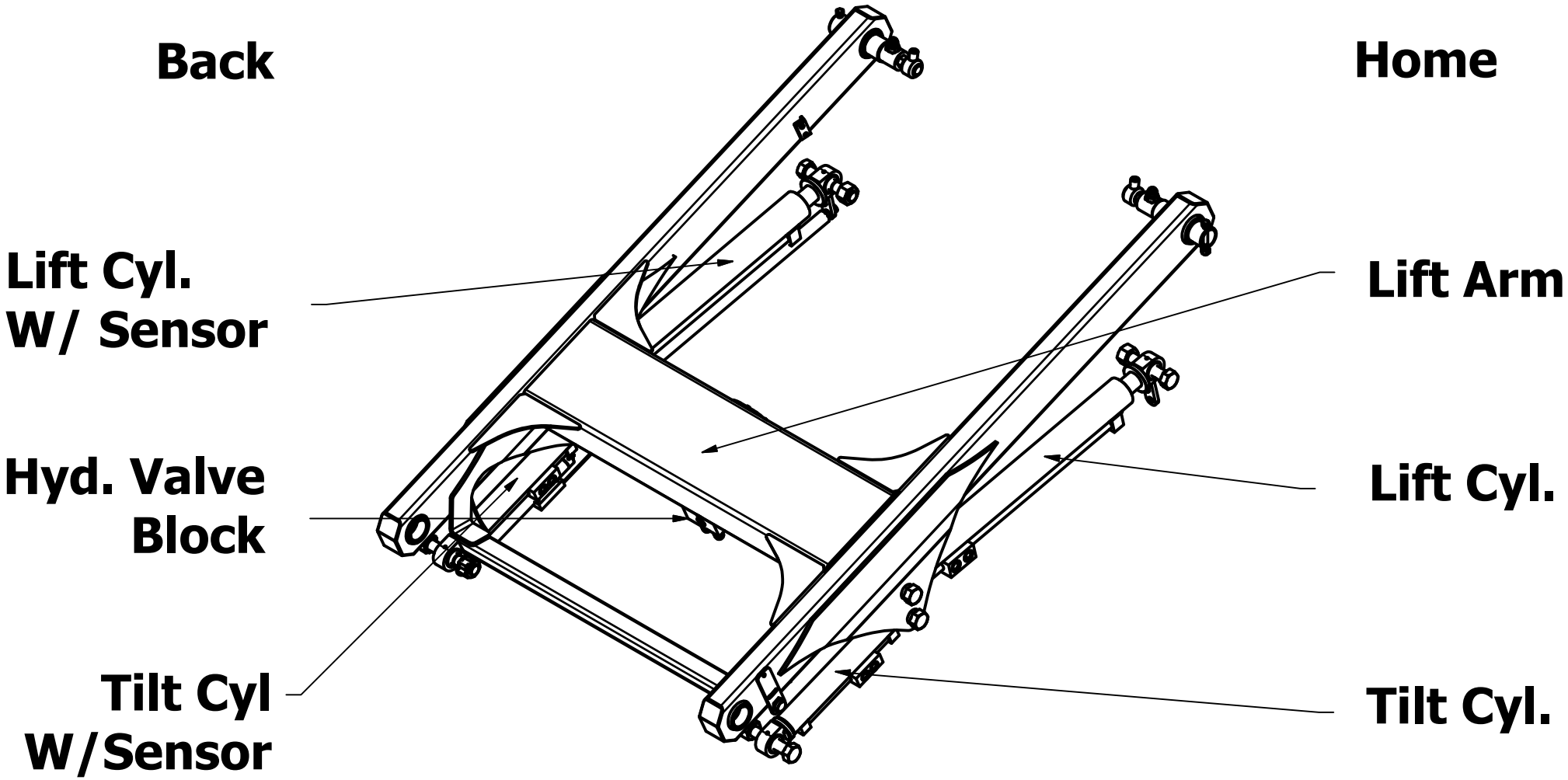

Squeeze Tilt Frame Assy

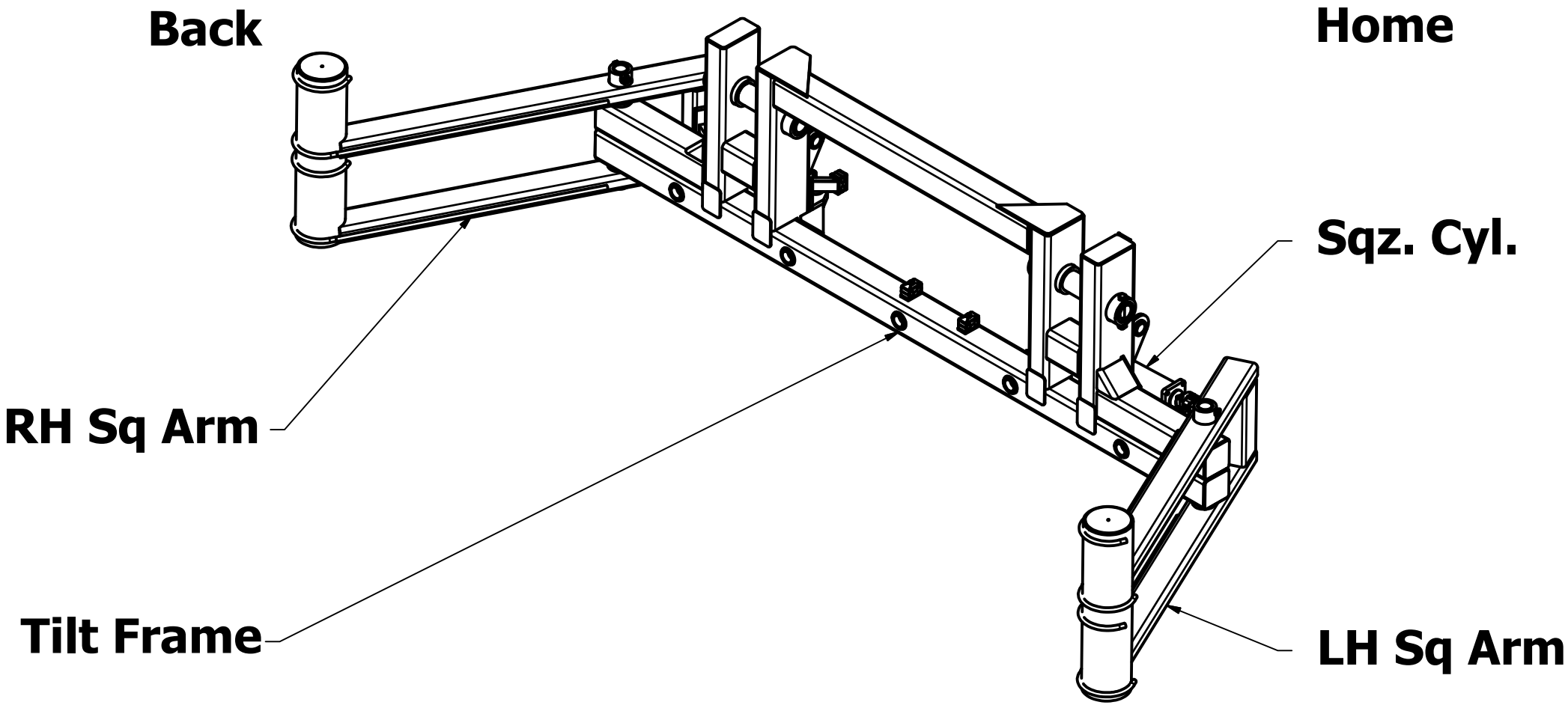

Lift Arm

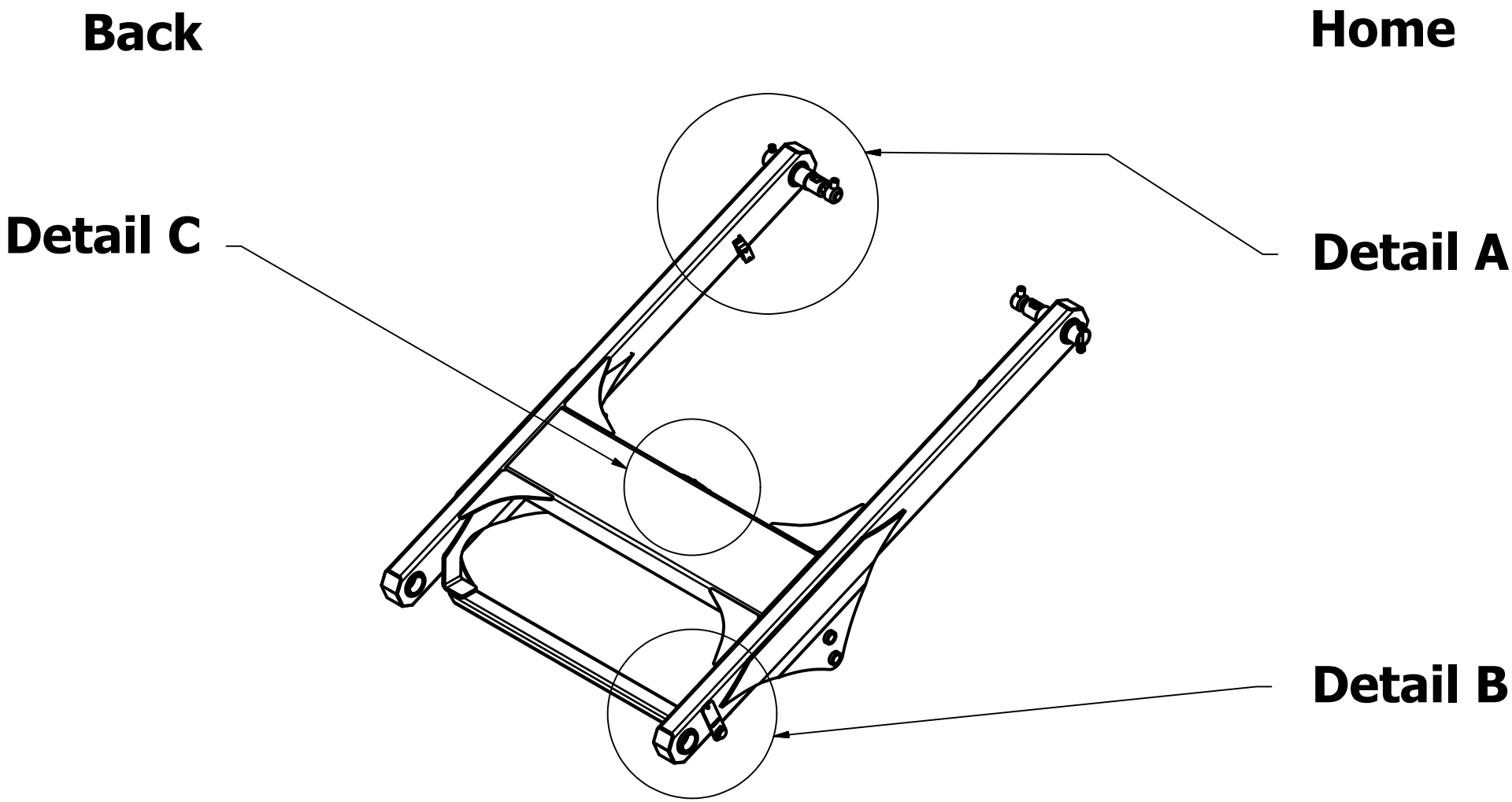

Lift Arm Detail B

Back **Home**

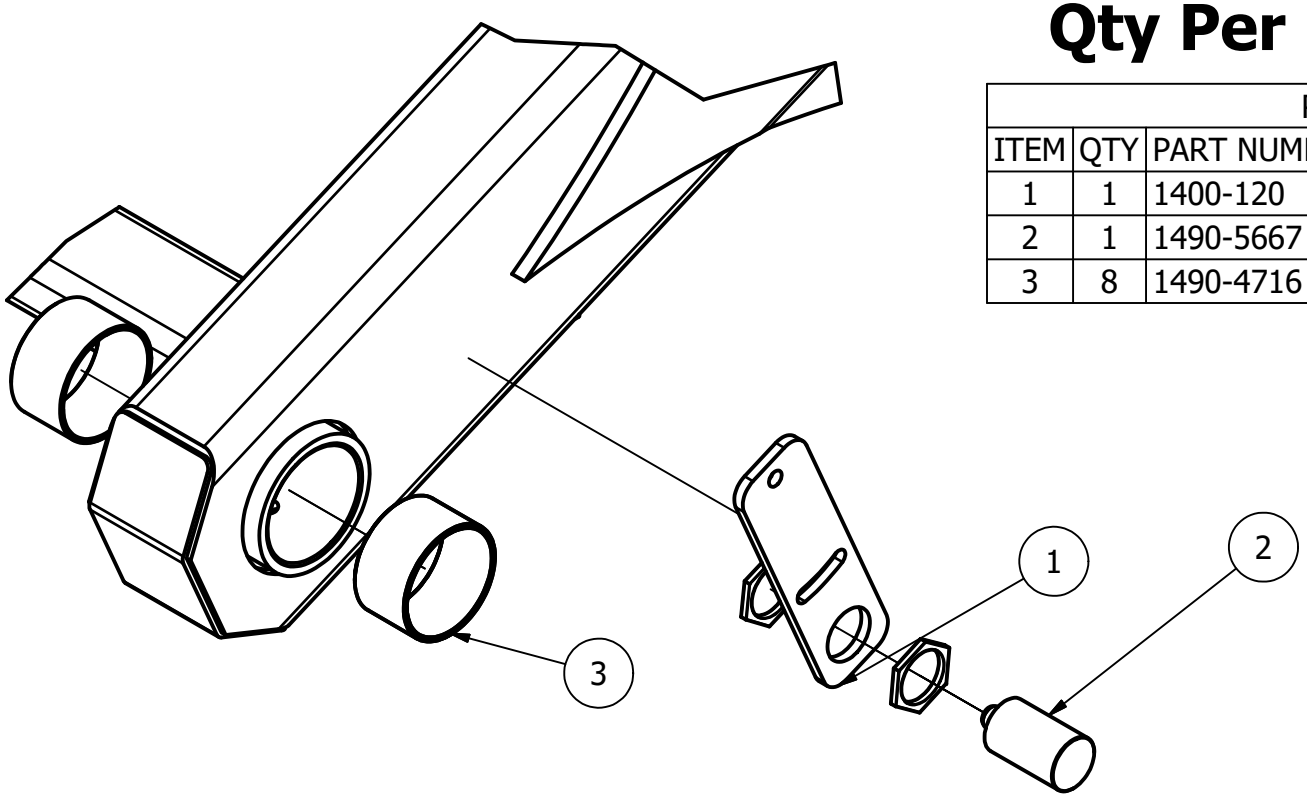

Qty Per Lift Arm Assy

PARTS LIST			
ITEM	QTY	PART NUMBER	DESCRIPTION
1	1	1400-120	Prox Switch Mount
2	1	1490-5667	Prox Switch W/QD at switch
3	8	1490-4716	Wear Bushing

Lift Arm Detail A

Back

Home

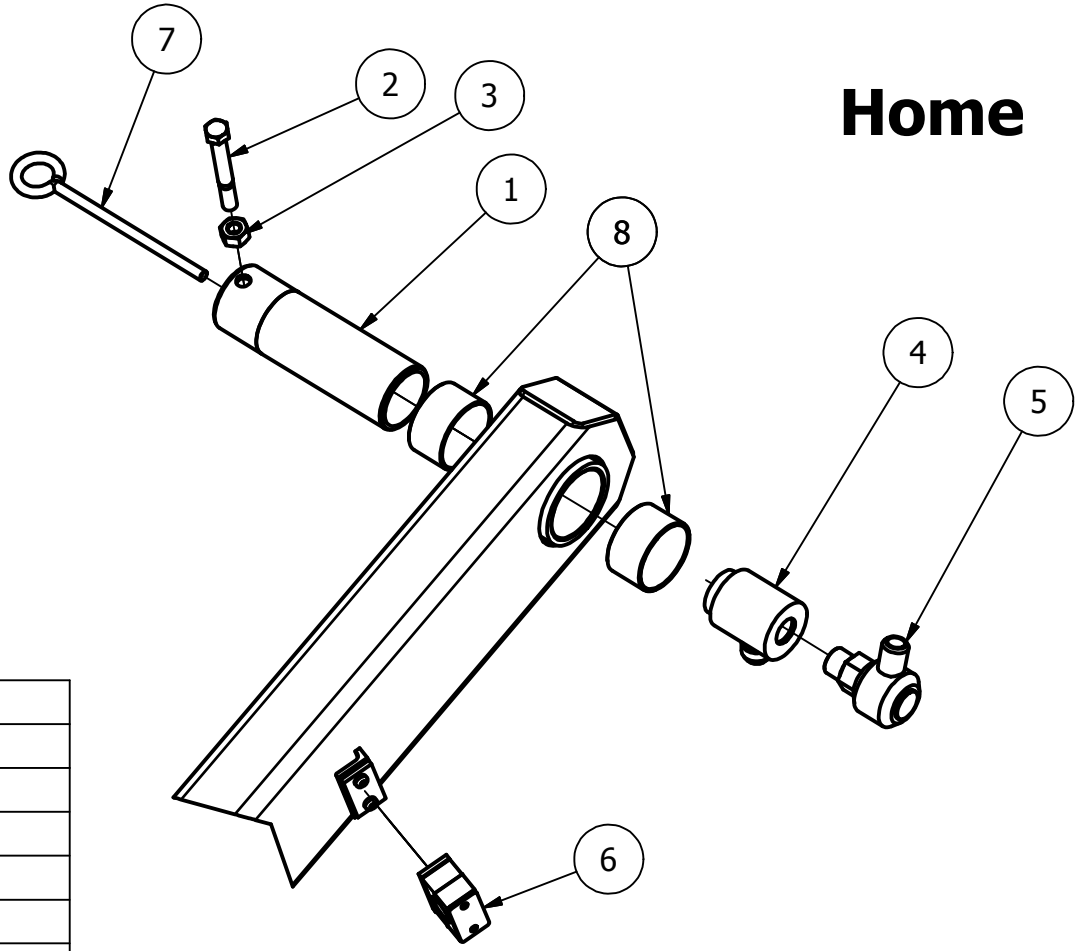

Qty Per Lift Arm Assy

PARTS LIST			
ITEM	QTY	PART NUMBER	DESCRIPTION
1	2	5540-111	Main Pivot Shaft
2	2	1/2-13 X 4"	Bolt
3	2	1/2-13 Nut	Nut
4	2	1490-5879	High Pressure Swivel Mount
5	2	1490-5849	High Pressure Swivel
6	4	Kit-Sng-.75	3/4" Single Hose Clamp
7	2	Eye bolt	3/8 X 8 Eye bolt
8	8	1490-4716	Wear Bushing

Lift Arm Detail C

Back

Home

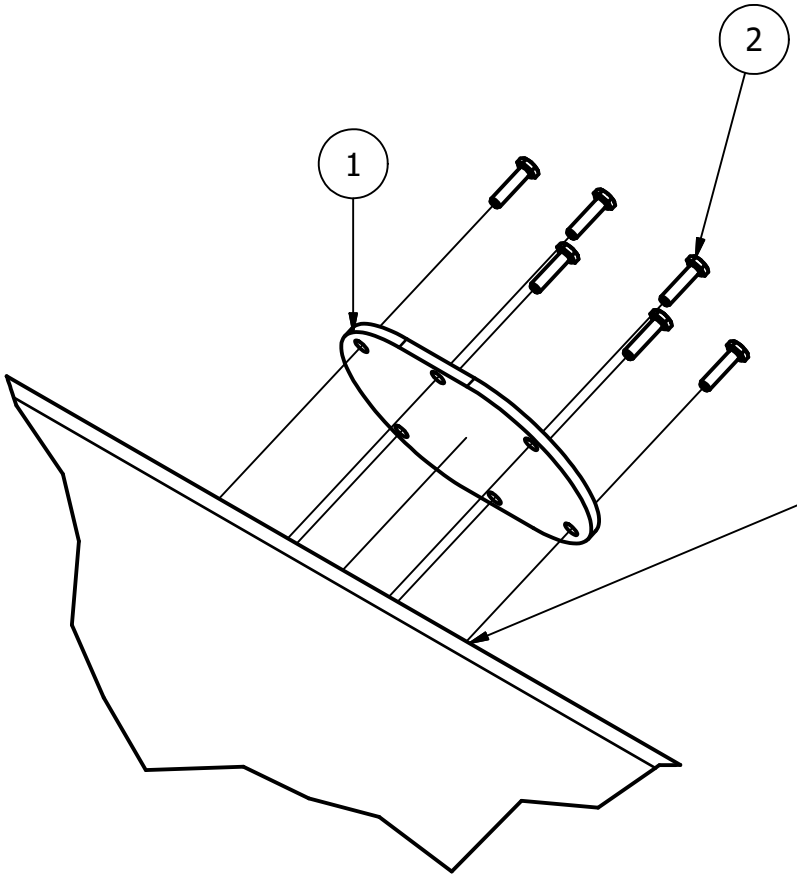

PARTS LIST			
ITEM	QTY	PART NUMBER	DESCRIPTION
1	1	5530-125	Lift Arm Crossmember Cover
2	6	1/4-20 X 1	1/4-20 X 1 Hex Head Bolt
3	1	5530-121	EVDR-6 Mounting Plate
4	1	1490-5861	EVDR-6 Controler
5	1	1490-5887	Frontend Wiring Harness

Inside the Crosstube

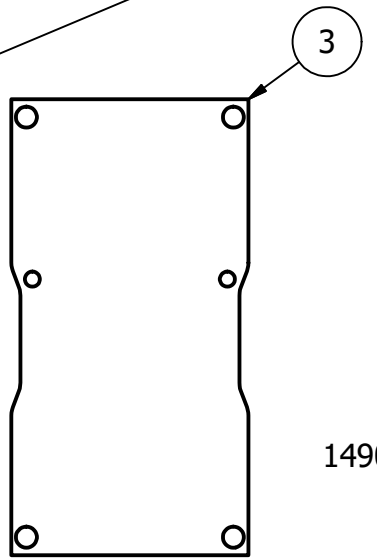

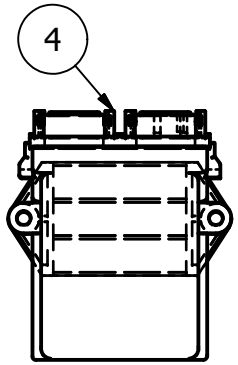

1490-5887 Front Wiring Harness includes
Valve and Cylinder Sensor Wires

Tilt Squeeze Cylinder Assy

(2-1/2 X 6 X 1-1/8" Cylinder)

Back

Home

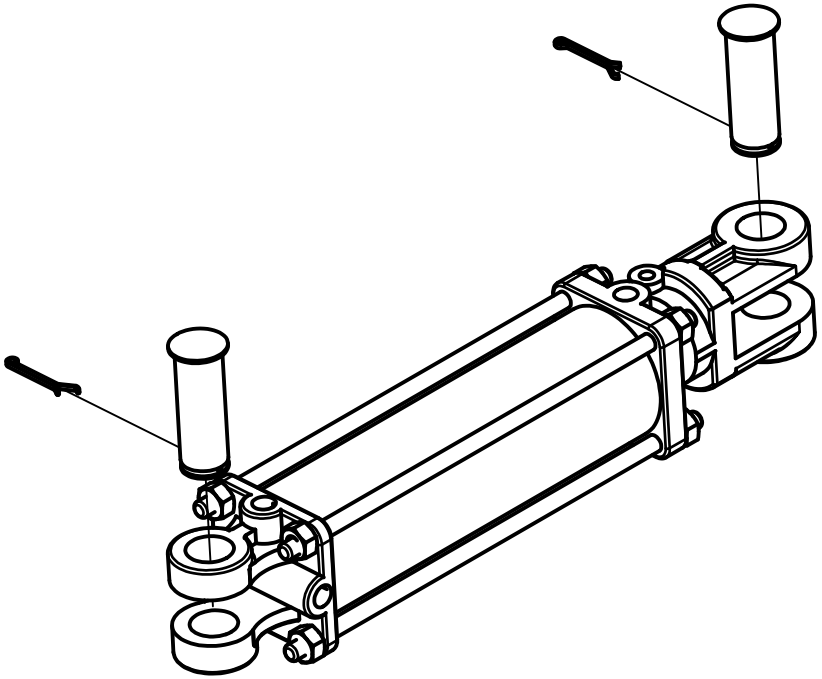

Cylinder Part Number
14905147
(Comes with both Cylinder pins)

Seal Kit Part Number
14901872
(2-1/2" bore, 6" Stroke, 1-1/8" Rod)

Rod End Clevis Part Number
14905958
(Hardened for 1" Cylinder pins 1-1/8" Thread)

Cylinder Pin Part Number
14904566
(1 X 2-3/4" W/Cotter pin)

RH Front Squeeze Arm Assy

Back **Home**

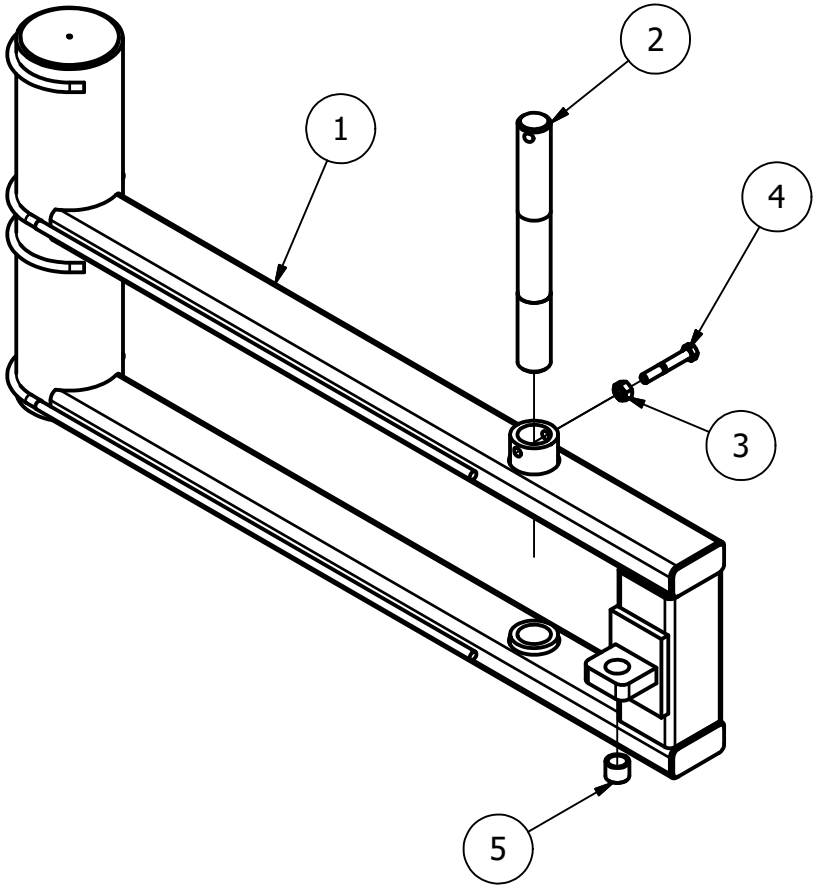

PARTS LIST			
ITEM	QTY	PART NUMBER	DESCRIPTION
1	1	1425A2R	RH Squeeze Arm
2	1	1420-305	Machined Shaft
3	1	1/2-13 Nut	Hex Nut
4	1	1/2-13 X 3-1/4 Bolt	Hex Bolt
5	1	14902030	Wear Bushing

LH Front Squeeze Arm Assy

Back **Home**

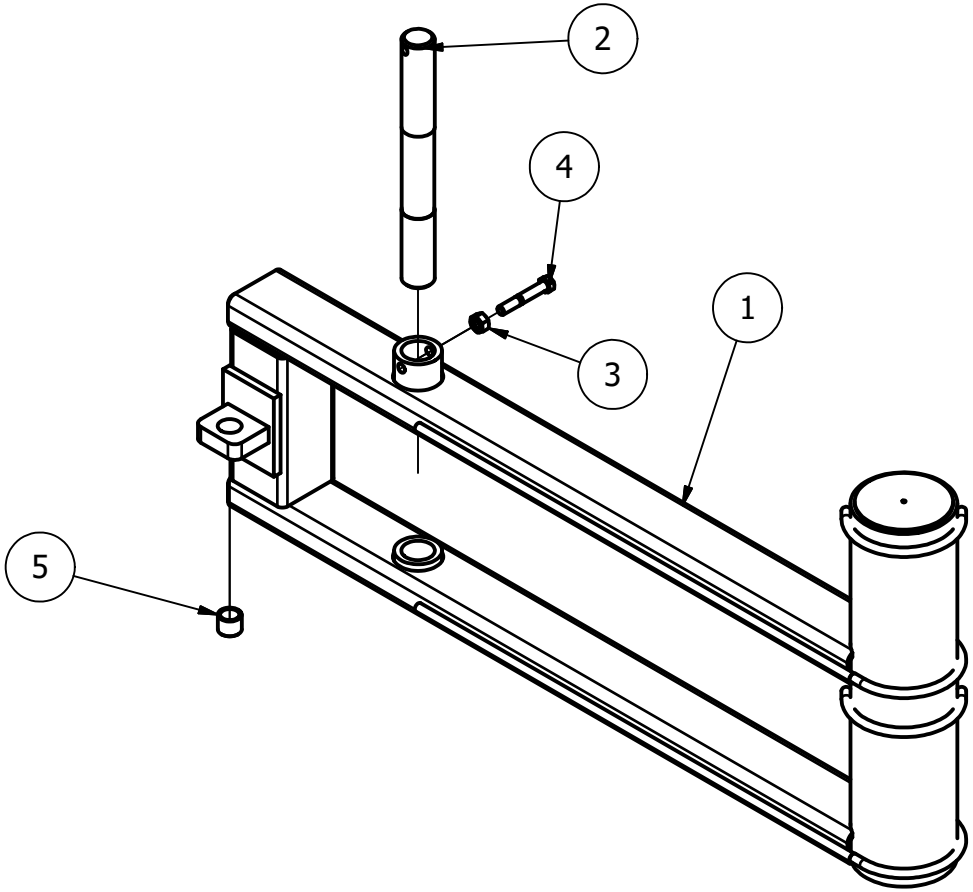

PARTS LIST			
ITEM	QTY	PART NUMBER	DESCRIPTION
1	1	1425A2L	RH Squeeze Arm
2	1	1420-305	Machined Shaft
3	1	1/2-13 Nut	Hex Nut
4	1	1/2-13 X 3-1/4 Bolt	Hex Bolt
5	1	14902030	Wear Bushing

Squeeze Front Tilt Frame Assy

Back **Home**

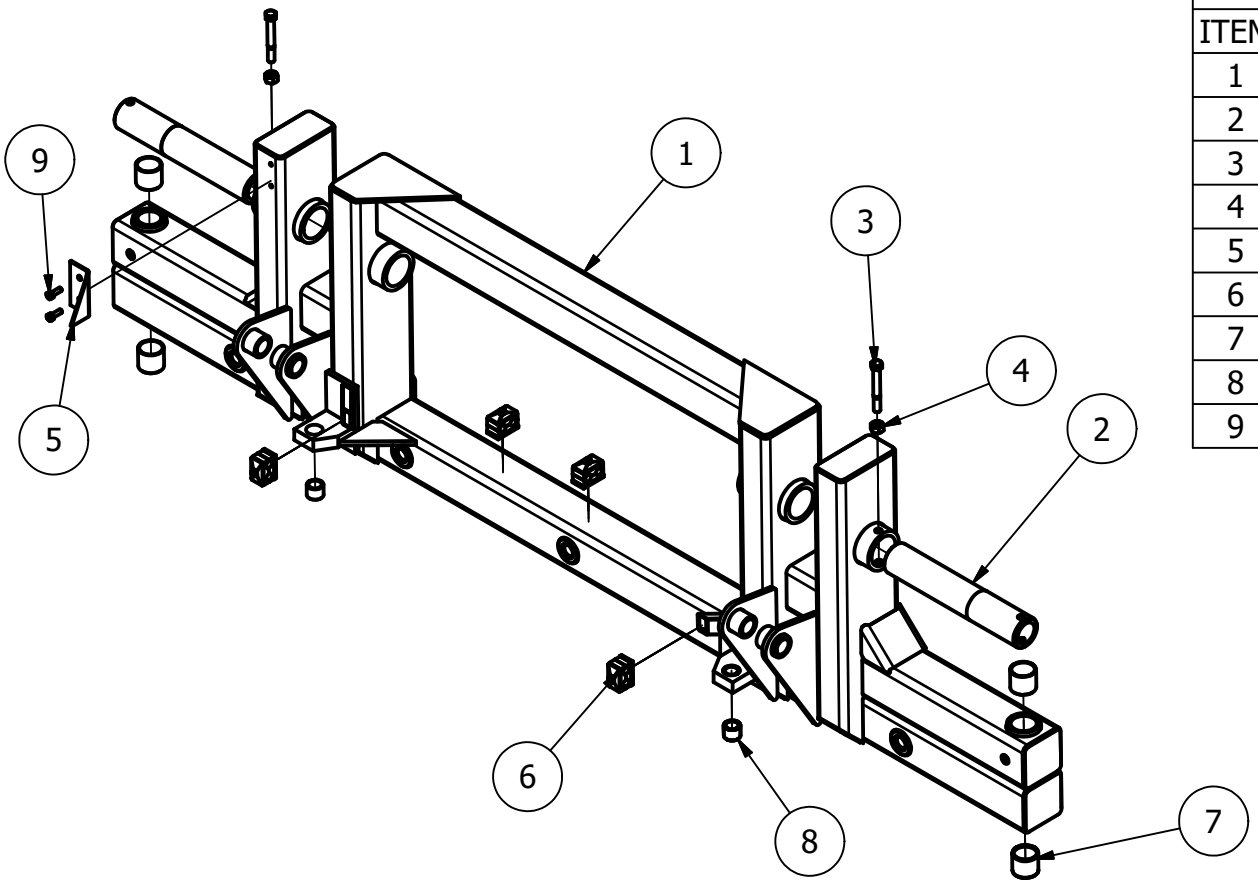

PARTS LIST			
ITEM	QTY	PART NUMBER	DESCRIPTION
1	1	5525A	Front Squeeze Tilt Frame
2	2	5520-110	Tilt Pivot Shaft
3	2	1/2-13 X 4	Hex Bolt
4	2	1/2-13 Nut	Hex Nut
5	1	5520-200	Tilt Prox Adjustent Angle
6	4	KIT-DBL-.375	3/8" Double Hose Clamp
7	4	14904654	Wear Bushing
8	2	14902030	Wear Bushing
9	2	5/16-18 X 1	Hex Bolt

Work Lights

The two Oval Trilliant lights look identical in appearence except for a Blue Ring along the outer edge of the lens on the 2500 lumen (Forward Facing) light.

Back

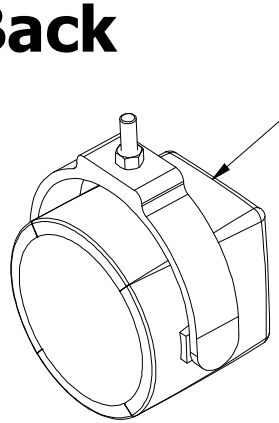

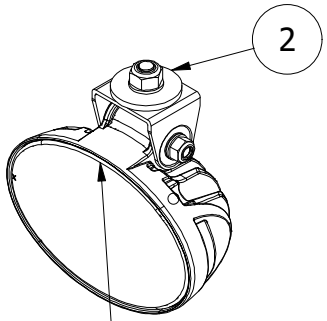

Upper Lights

2500 Lumen
Blue Ring

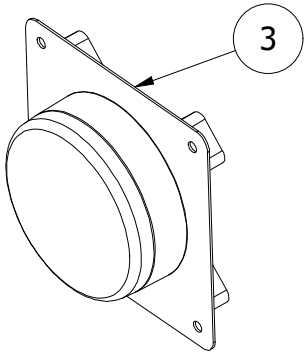

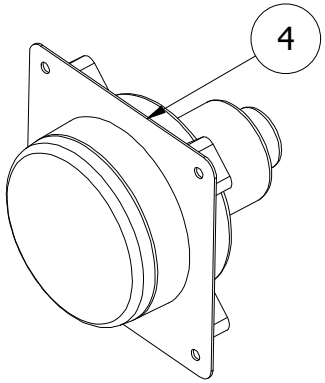

Hi Beam Bulb
1490-6616

Bumper Lights

Low Beam Bulb
1490-6617

Home

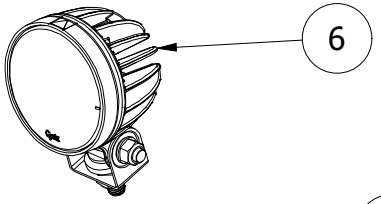

Add-On $\frac{1}{4}$ Turn Light

1490-6690 Wire Harness required to add any LED light to an older machine

Wiring Harnesses

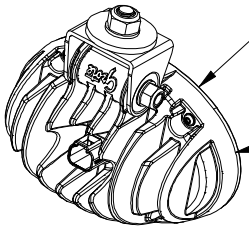

Rear-Facing 1/4-Turn
& Squeeze-Rail Lights
1200 Lumen (No Blue Ring)

Quantity per machine		PARTS LIST	
ITEM	QTY	PART NUMBER	DESCRIPTION
1	2	1490-6770	Rallye 4000 LED Driving Lamp
2	2	1490-6320	Trilliant LED Oval 2500 Lumens Flood Light
3	2	1490-6558	Hi Beam Headlight (2014 & Later Inner)
4	2	1490-6557	Low Beam Headlight (2014 & Later Outer)
5	6	1490-6319	Trilliant LED Oval 1200 Lumens Flood Light
6	1	1490-6611	Trilliant T26 LED 1400 Flood Light

Wiring Harnesses

Back

Not Drawn to Scale

Home

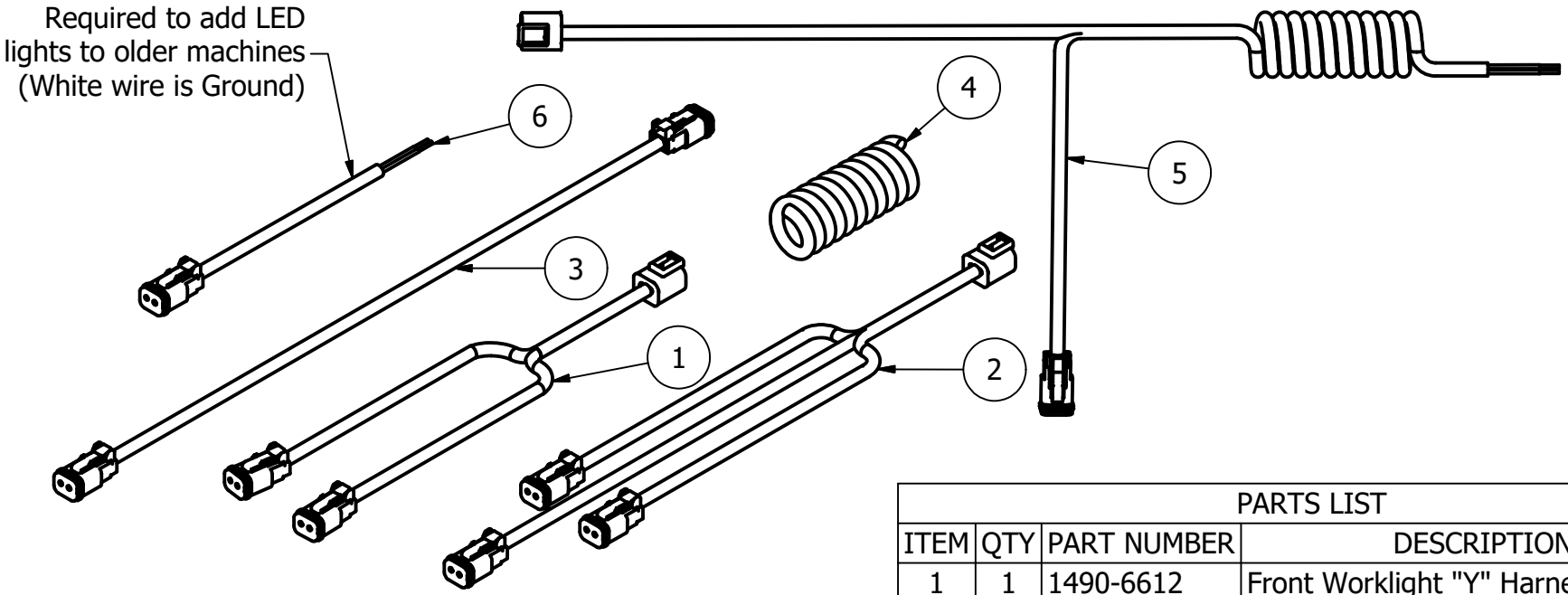

PARTS LIST			
ITEM	QTY	PART NUMBER	DESCRIPTION
1	1	1490-6612	Front Worklight "Y" Harness (LH)
2	1	1490-6613	Front Worklight "W" Harness (RH)
3	1	1490-6689	Squeeze Rail Wiring Harness (Long)
4	1	1490-5955	Rear Work Light Power Supply Cord
5	1	1490-6691	Squeeze Rail Wire Harness Assembly
6	1	1490-6690	Rear Work Light Power Supply Cord

LED Turn/Brake Lights

Back **Home**

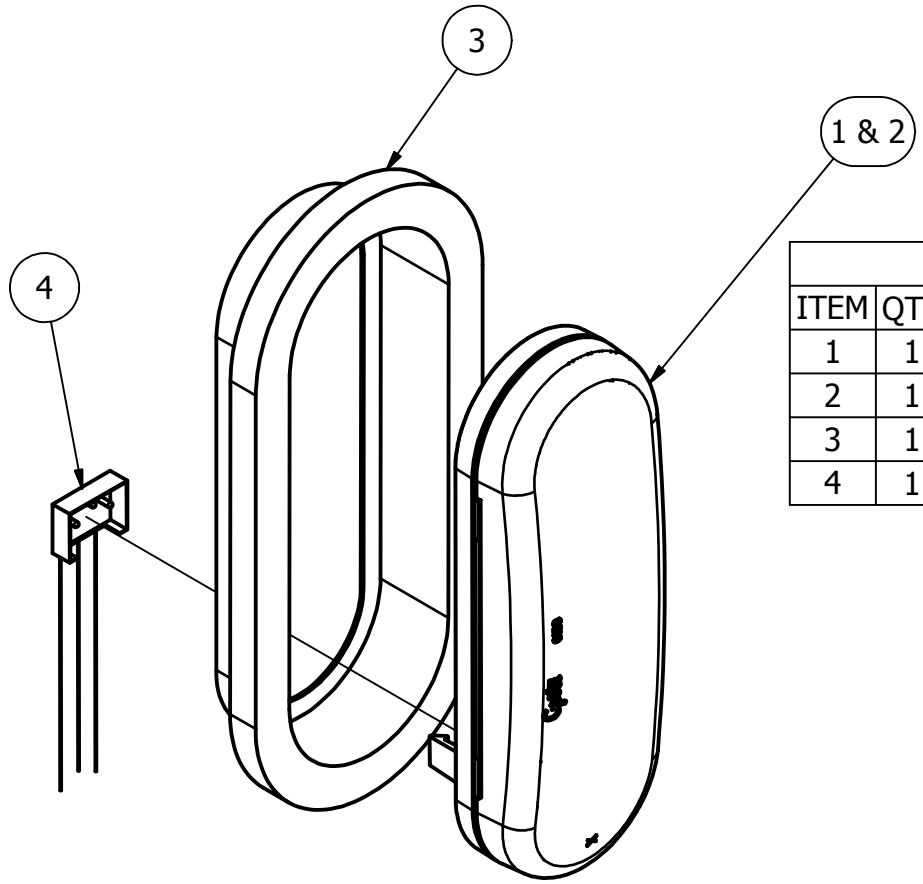

PARTS LIST			
ITEM	QTY	PART NUMBER	DESCRIPTION
1	1	1490-6188	Red LED Turn/Brake Light
2	1	1490-6189	Amber LED Turn Signal Light
3	1	1490-6265	Rubber Grommet for Tail lights
4	1	1490-6266	3-Pin Pigtail

Compartment Light Detail

Back **Home**

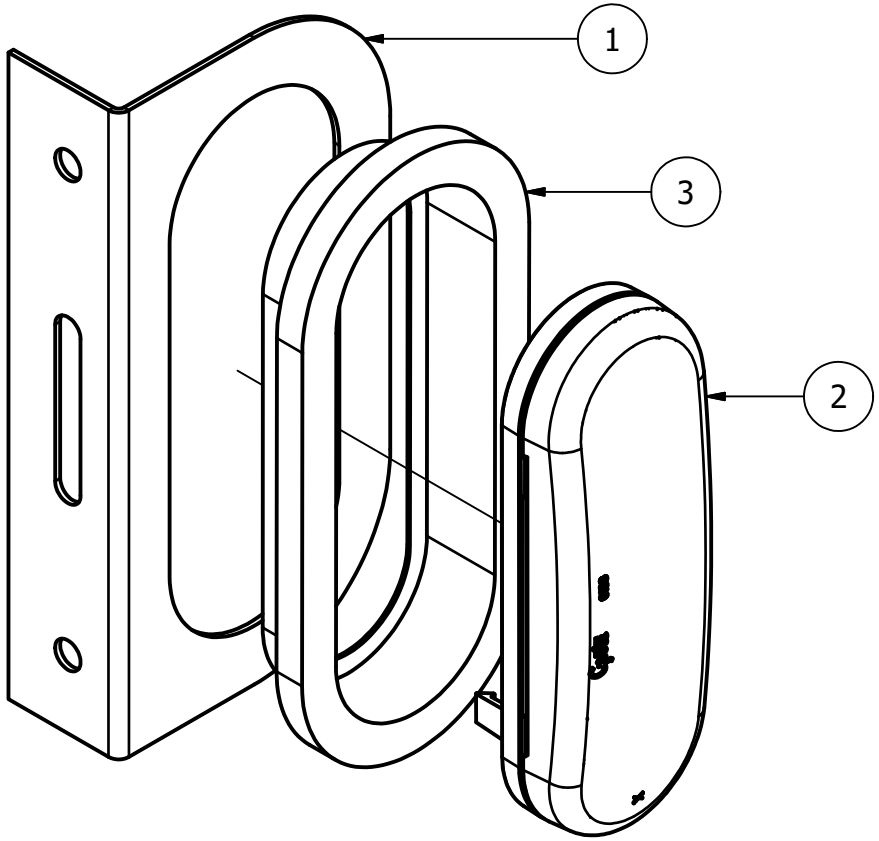

PARTS LIST			
ITEM	QTY	PART NUMBER	DESCRIPTION
1	1	1490-3502	Black Steel Oval Light Bracket
2	1	1490-6321	Oval 6" LED Dome Compartment Light
3	1	1490-6265	Rubber Grommet for Tail lights

Stinger 6500 Stacker

LH Mirror Bracket

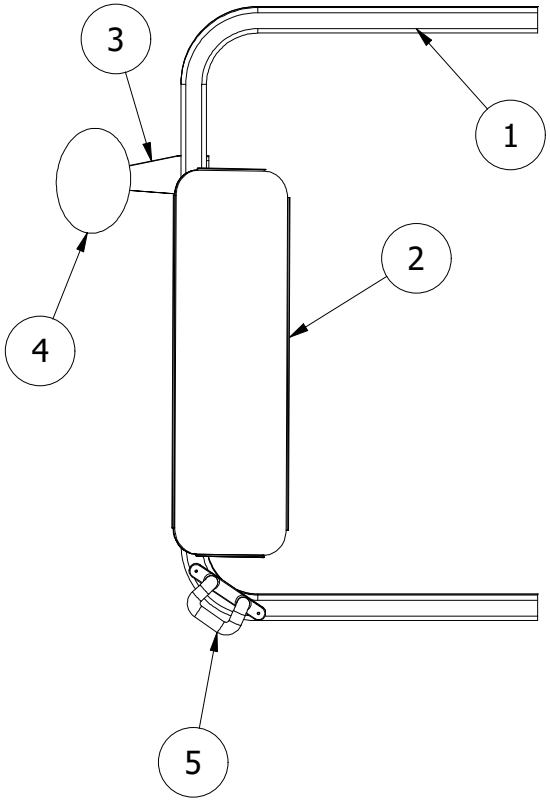

PARTS LIST			
ITEM	QTY	PART NUMBER	DESCRIPTION
1	1	2006A3L	2006 500 Series LH Mirror Bracket
2	1	1490-5379	10X30 Mirror Assy
3	1	6550-110	Parabolic Mirror Bracket
4	1	1490-5087	8" Rd Convex Mirror
5	1	14904243	Molded Grab Handle

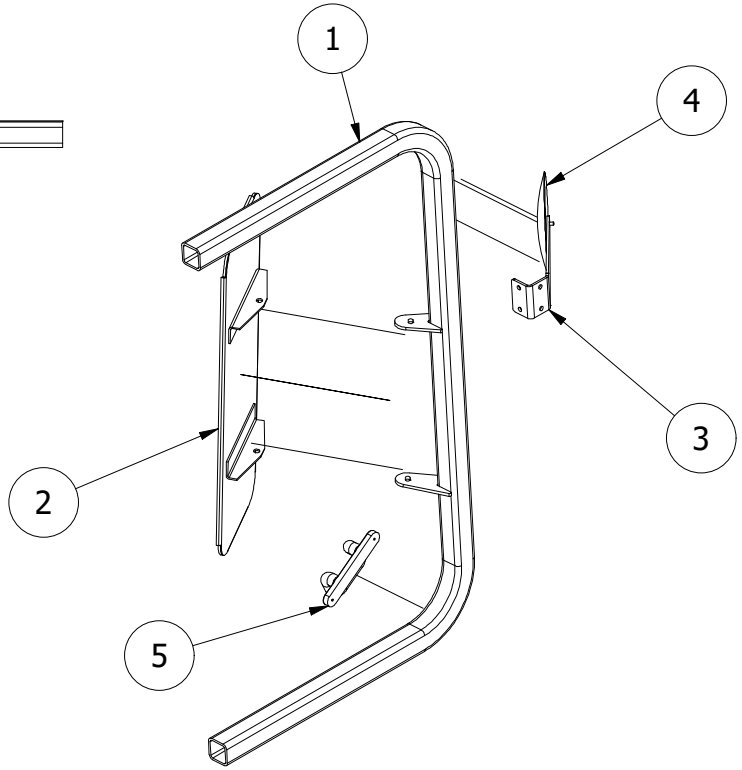

RH Mirror Bracket

PARTS LIST			
ITEM	QTY	PART NUMBER	DESCRIPTION
1	1	2006A3R	2006 500 Series RH Mirror Bracket
2	1	1490-5379	10X30 Mirror Assy
3	1	1490-5087	8" Rd Convex Mirror
4	1	6550-110	Parabolic Mirror Bracket

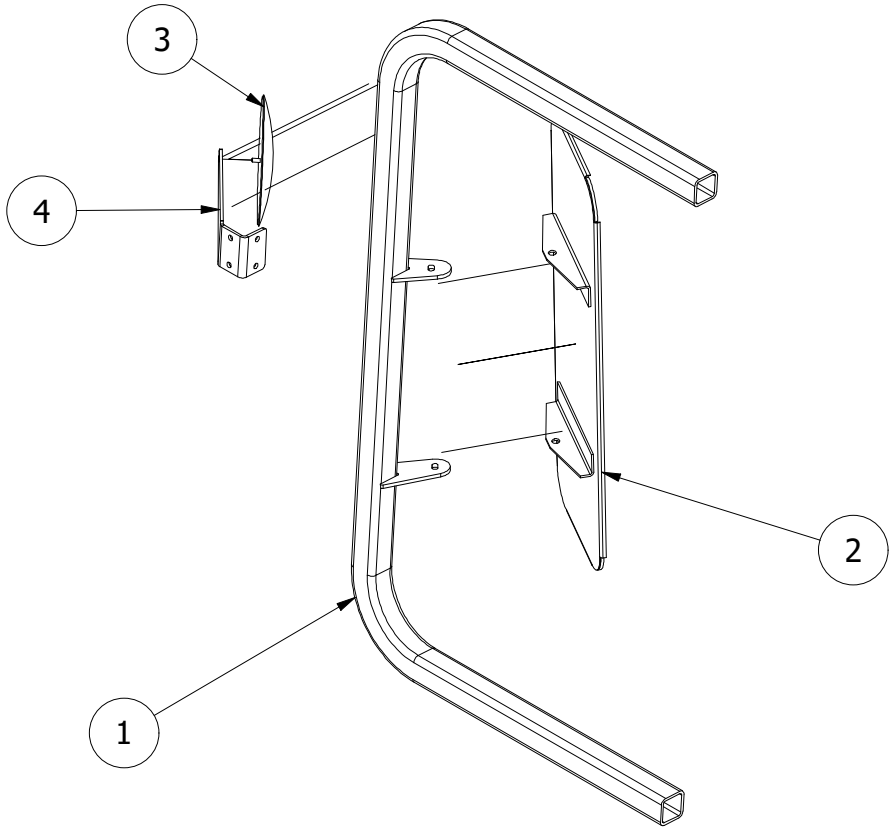

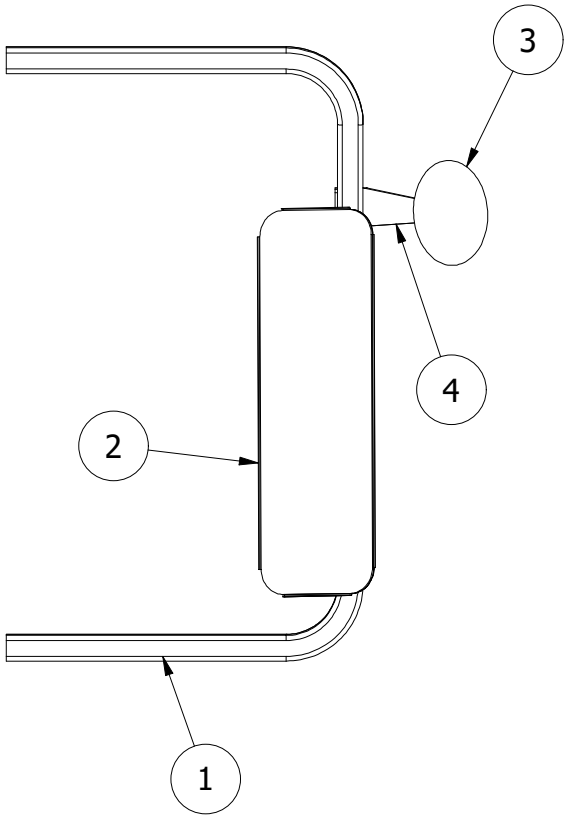

5530-204RH

(5530-204 W/Sensor)

PARTS LIST			
ITEM	QTY	PART NUMBER	DESCRIPTION
1	1	5530-204	3 x 30 x 2 Welded Cylinder
2	1	1490-5853	30" Sensor Housing
3	2	5530-130	Cylinder Pivot Bearing
4	1	5530-206	Position Sensor Mounting Cap Weldment
5	4	1490-5878	Wear Bushing
6	1	1490-5867	30" Cylinder Linear Sensor
7	2	1490-5104	HCS 1-1/4-12 x 7, Zinc Plate Grade 8
8	2	1490-2081	Top Lock 1-1/4 - 12, Zinc Plate Grade 8
9	1	1490-6624	Acorn Nut for Sensor Housing
10	4	Cap Screw	1/4 X 2-1/4 Allen Head Cap Screw (33608)

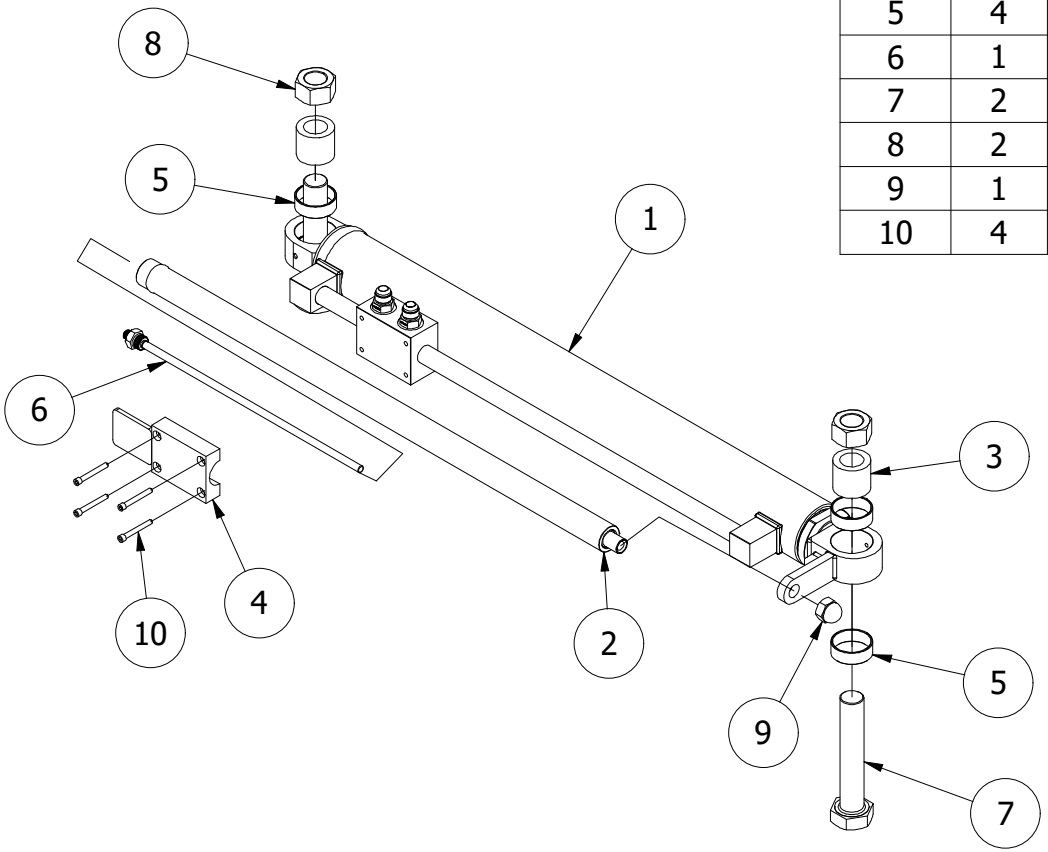

Cylinder Seal Kit 1490-5019

Sensor Housing Seal Kit 1490-6297

Sensor requires 1 - 8MB O-Ring

5530-205RH

(5530-205 W/Sensor)

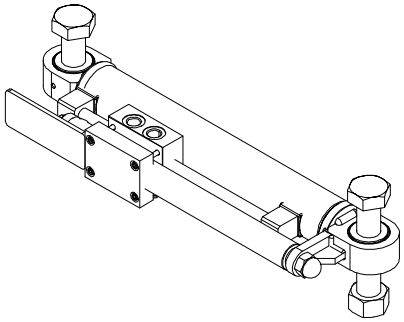

PARTS LIST			
ITEM	QTY	PART NUMBER	DESCRIPTION
1	1	5530-205	2-1/4 X 13 Tilt Cylinder
2	2	5530-130	Cylinder Pivot Bearing
3	1	1490-5854	13" Sensor Housing
4	1	1490-5866	13" Sensor
5	1	1490-6624	Acorn Nut for Sensor Housing
6	1	5530-207	Position Sensor Mounting Cap Weldment
7	4	Cap Screw	1/4 X 2-1/4 Cap Screw (33608)
8	4	1490-5878	Wear Bushing
9	2	1490-5104	HCS 1-1/4-12 x 7, Zinc Plate Grade 8
10	2	1490-2081	Top Lock 1-1/4 - 12, Zinc Plate Grade 8

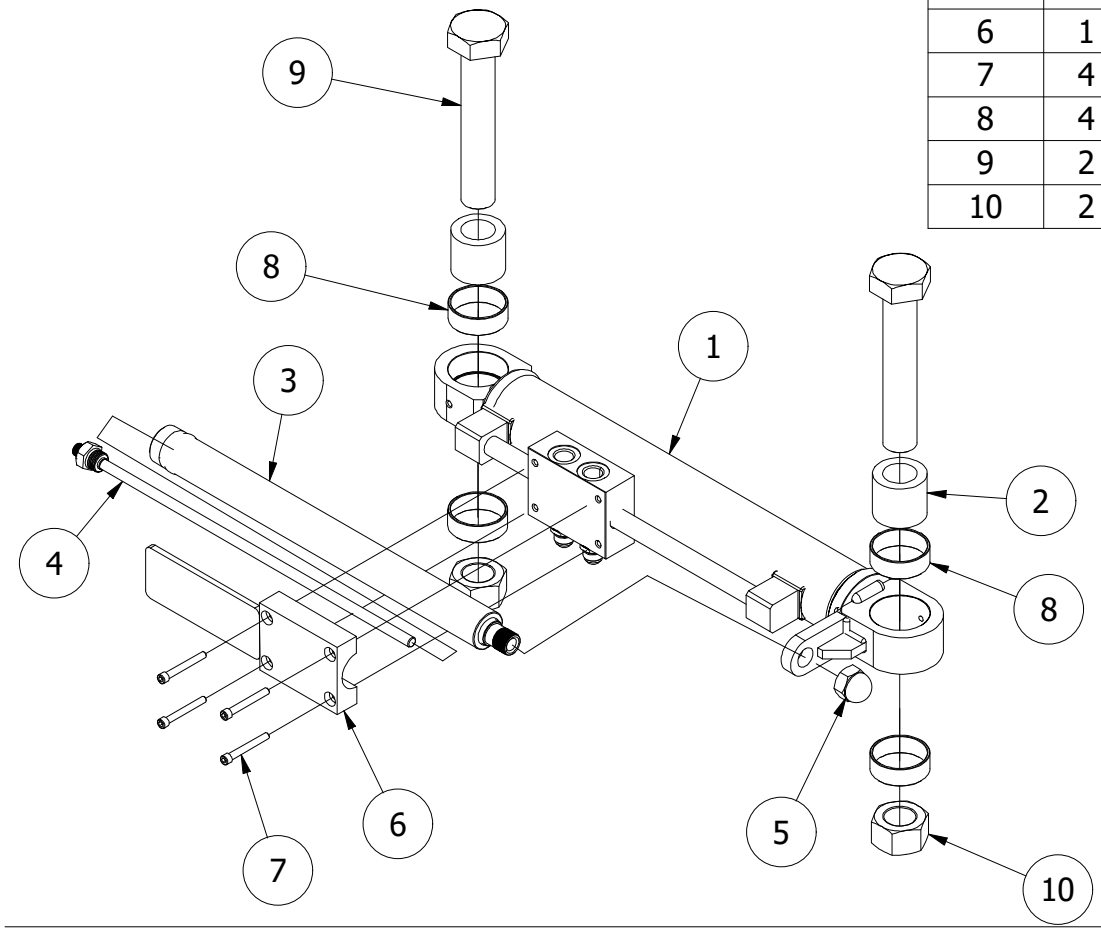

Cylinder Seal Kit 1490-4756

Sensor Housing Seal Kit 1490-6297

Sensor requires 1 - 8MB O-Ring

5530-205

Back **Home**

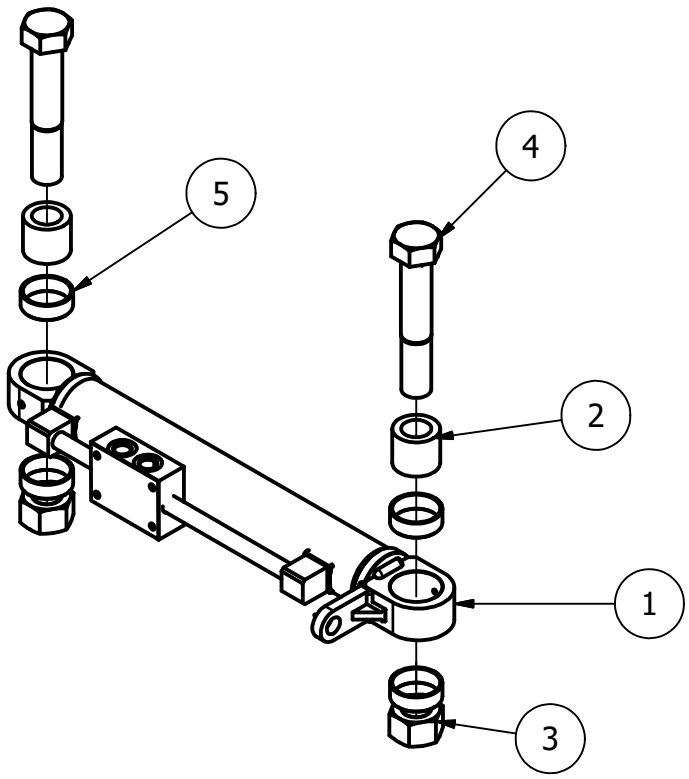

PARTS LIST			
ITEM	QTY	PART NUMBER	DESCRIPTION
1	1	5530-205	2-1/4 X 13 Tilt Cylinder
2	2	5530-130	Cylinder Pivot Bearing
3	2	14902081	Top Lock 1-1/4 - 12, Zinc Plate Grade 8
4	2	14905104	HCS 1-1/4 - 12 x 7, Zinc Plate Grade 8
5	4	1490-5878	Wear Bushing

Cylinder Seal Kit 1490-4756

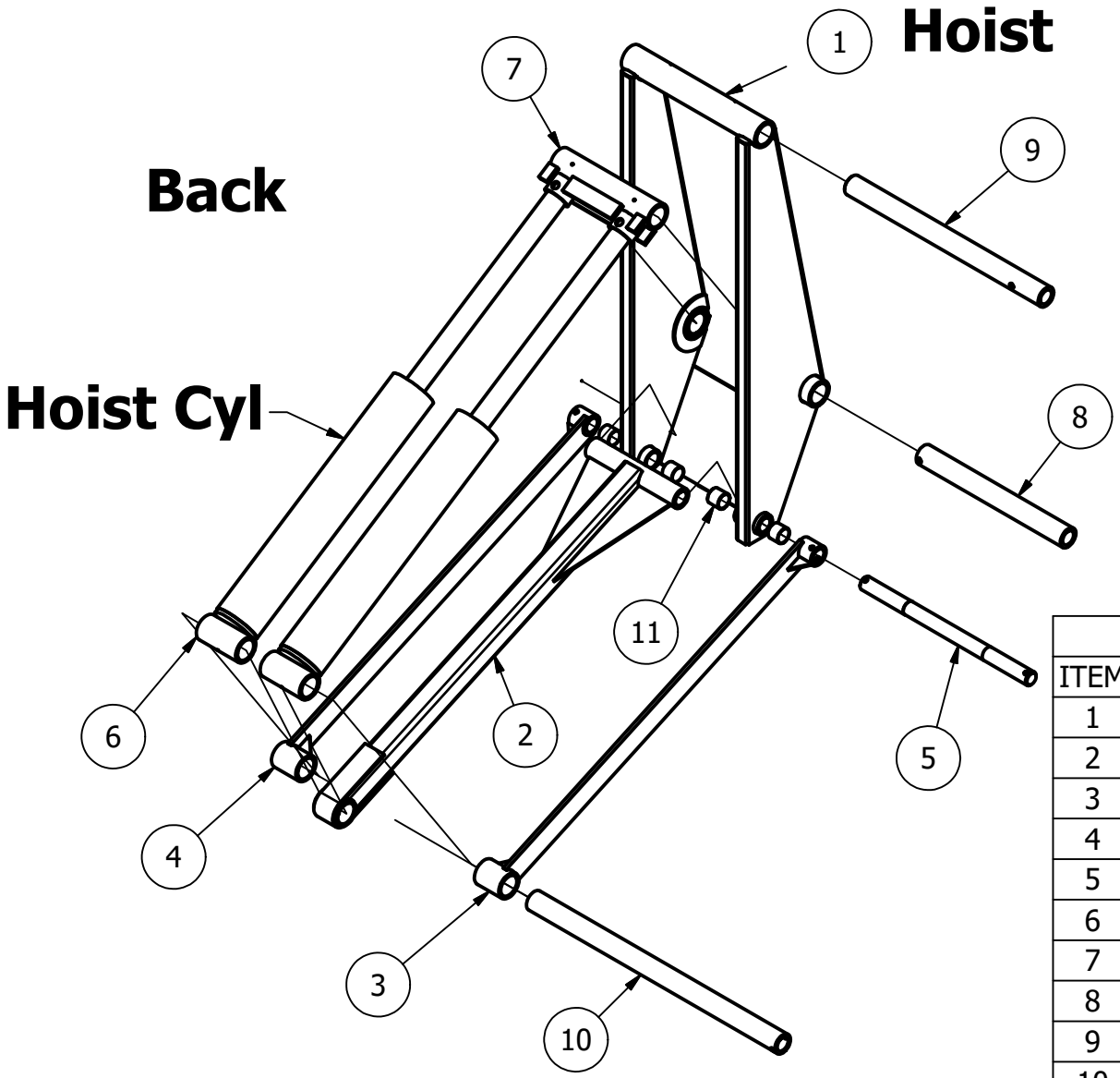

PARTS LIST			
ITEM	QTY	PART NUMBER	DESCRIPTION
1	1	2413A1	Main Hoist Assembly
2	1	2413A4	Hoist Lower Center Arm
3	1	2413A5	Hoist Lower Left Arm
4	1	2413A6	Hoist Lower Right Arm
5	1	2410-410	Machined Shaft
6	2	2413A3D	Hoist Cylinder
7	1	2413A2	Hoist cylinder head assy
8	1	2410-418	Cylinder Pivot Shaft
9	1	2410-422	Hoist Pivot Shaft (Stack Frame)
10	1	2460-333	Hoist Pivot Shaft (Main Slide)
11	4	1490-4654	Wear Bushing

Hoist Cylinder
2413A3D

Back **Home**

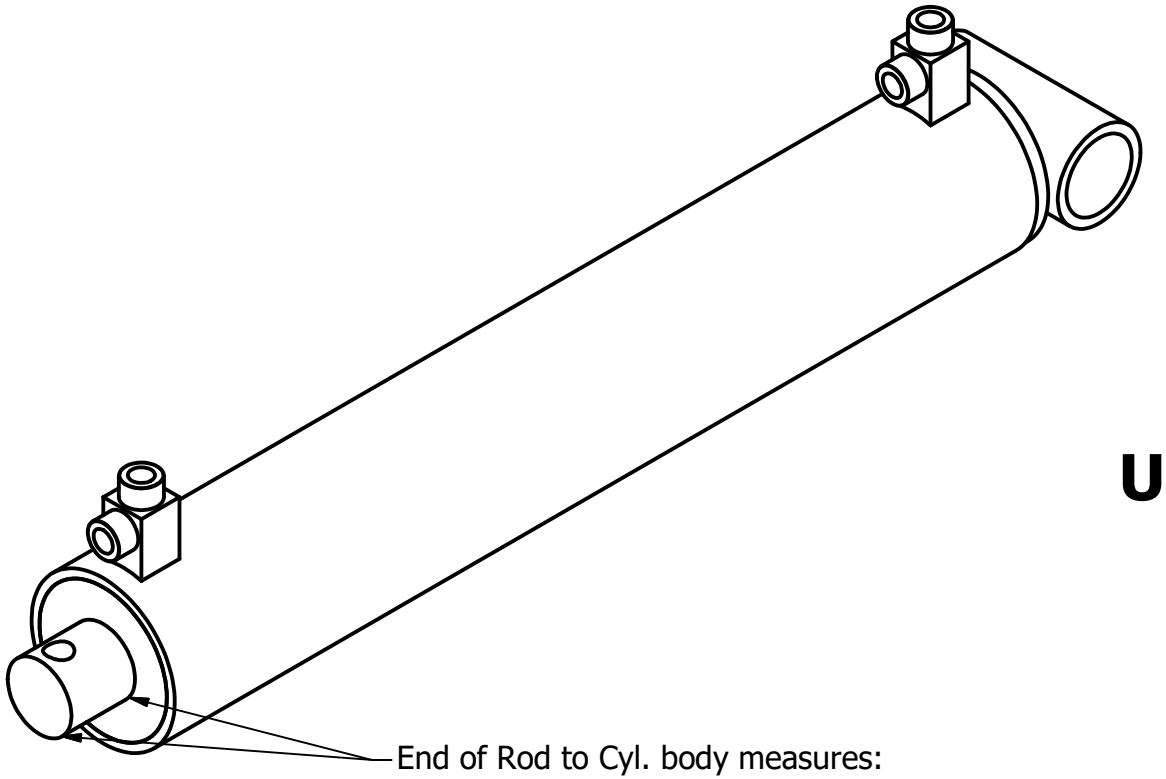

Identical to 2413A3C but with a 28" stroke which forces the stackframe further past center during stacking.

Factory installed on S/N 540, 557 and later units, you must install pairs whenever you replace these on older units.

Use Seal Kit # 1490-1686

End of Rod to Cyl. body measures:
2-1/8" on 2413A3D (28" Stroke)
2-3/8" on 2413A3C (27-1/2" Stroke)
When Fully Colapsed

5530-204

Back

Home

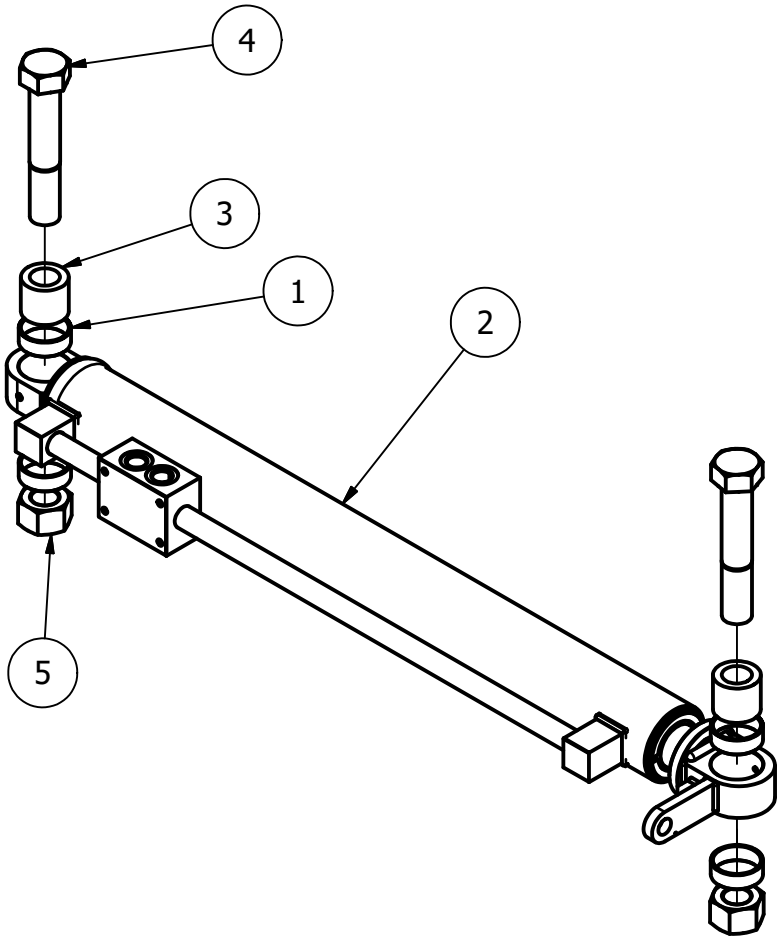

PARTS LIST			
ITEM	QTY	PART NUMBER	DESCRIPTION
1	4	1490-5878	Wear Bushing
2	1	5530204	3 X 30 X 2 Welded Cylinder
3	2	5530-130	Cylinder Pivot Bearing
4	2	14905104	HCS 1-1/4 - 12 x 7, Zinc Plate Grade 8
5	2	14902081	Top Lock 1-1/4 - 12, Zinc Plate Grade 8

Cylinder Seal Kit 1490-5019

Stackframe Assy

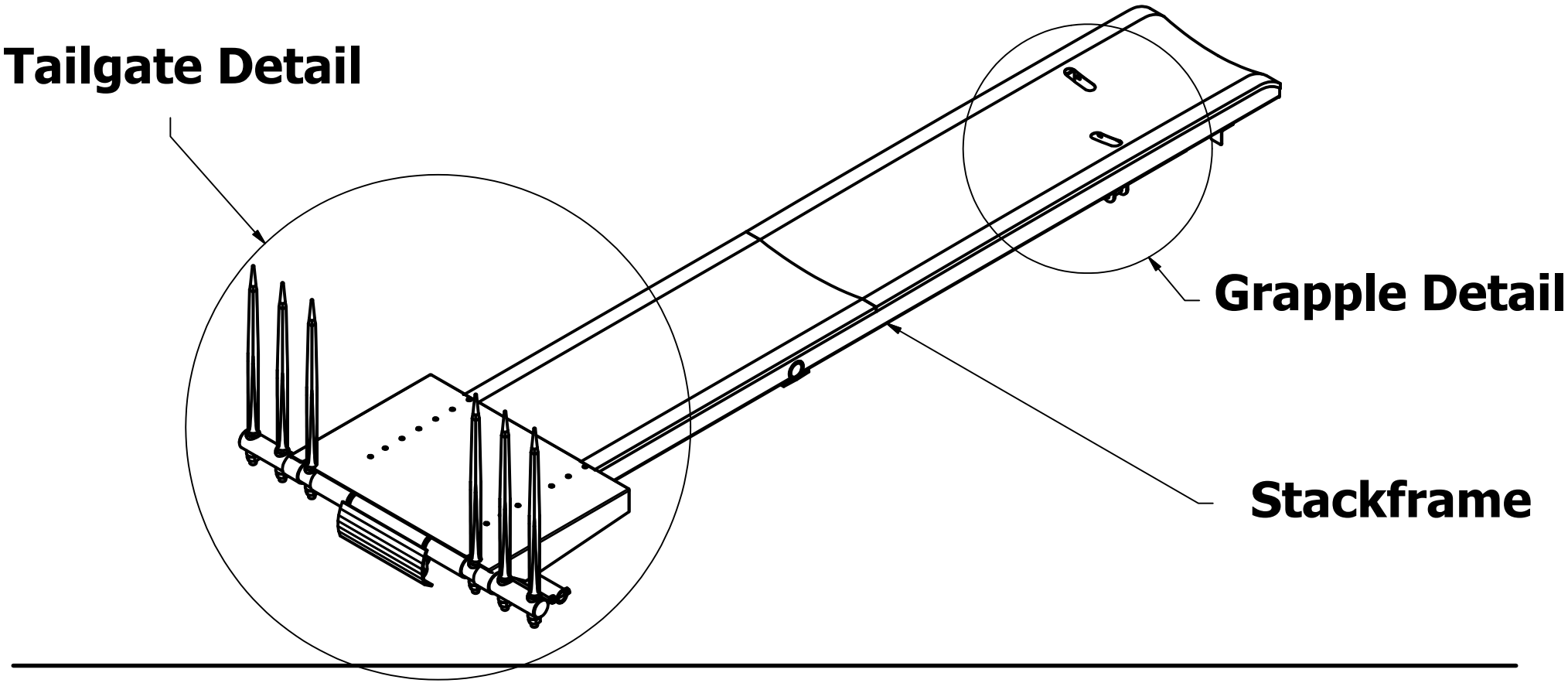

Tailgate Detail

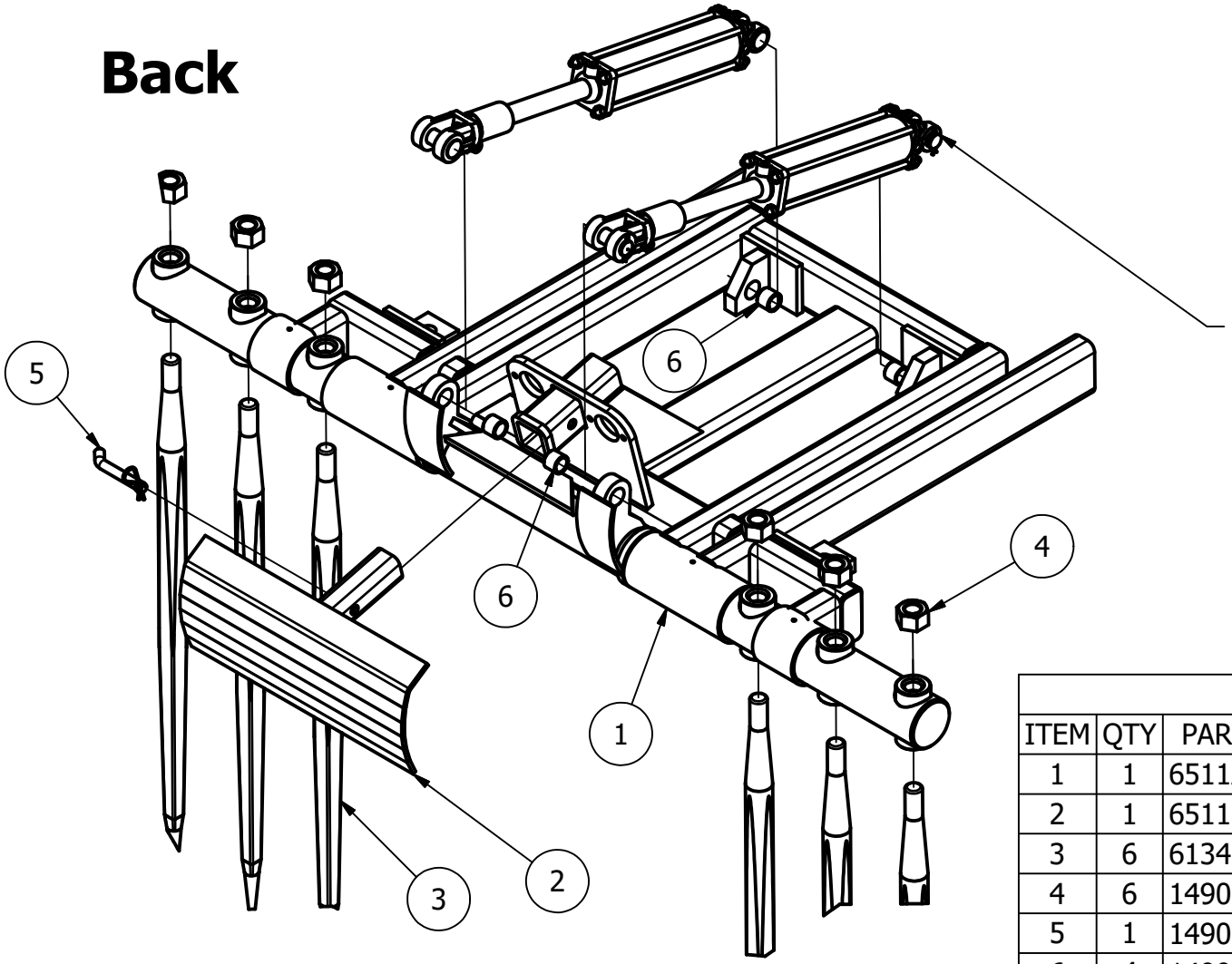

PARTS LIST			
ITEM	QTY	PART NUMBER	DESCRIPTION
1	1	6511A	Stacking Tailgate
2	1	6511-A2	Removable Rear Skidplate
3	6	6134	34" Bale Spear
4	6	1490-4394	Large Course Nut M30 X 2
5	1	1490-6213	Hitch Pin 5/8 X 3 W/Keeper
6	4	14902030	Wear Bushing

Tailgate Cylinder

(With Adjustable Stop Collar)
(New 3" Cylinder can replace old 2-1/2")

Back **Home**

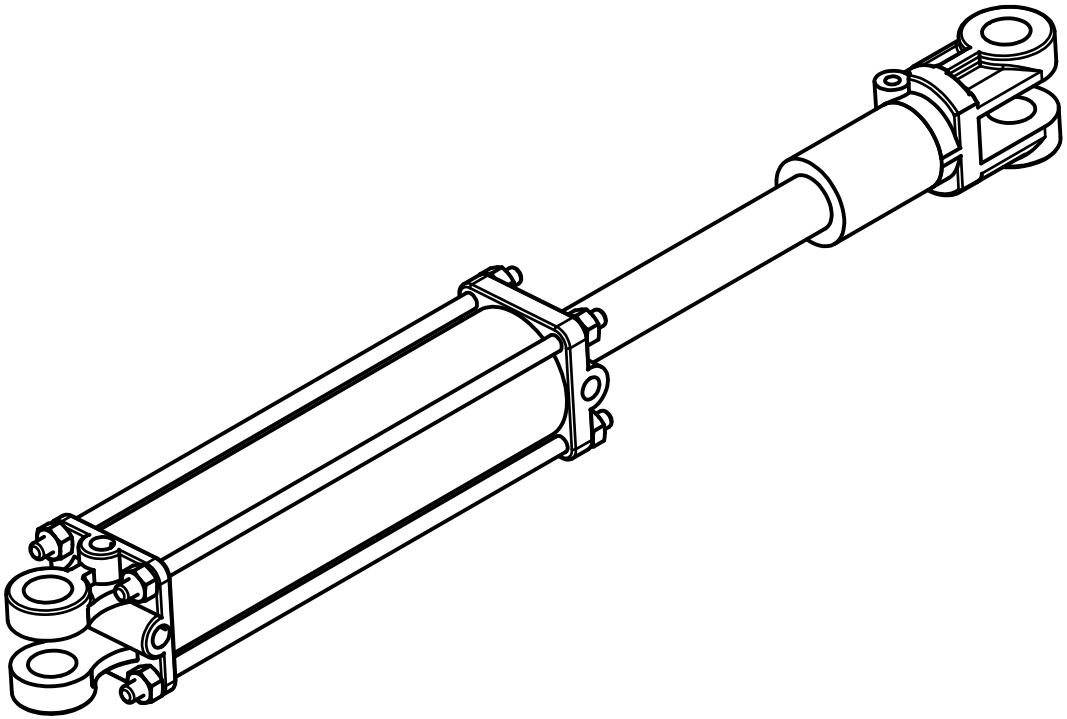

Cylinder Part Number
1490-2516
(Old 2-1/2" 1490-1892)

Seal Kit Part Number
1490-1874
(Old 2-1/2" 1490-1873)

Cyl Pin Part Number
1490-4566

Stackframe Detail B

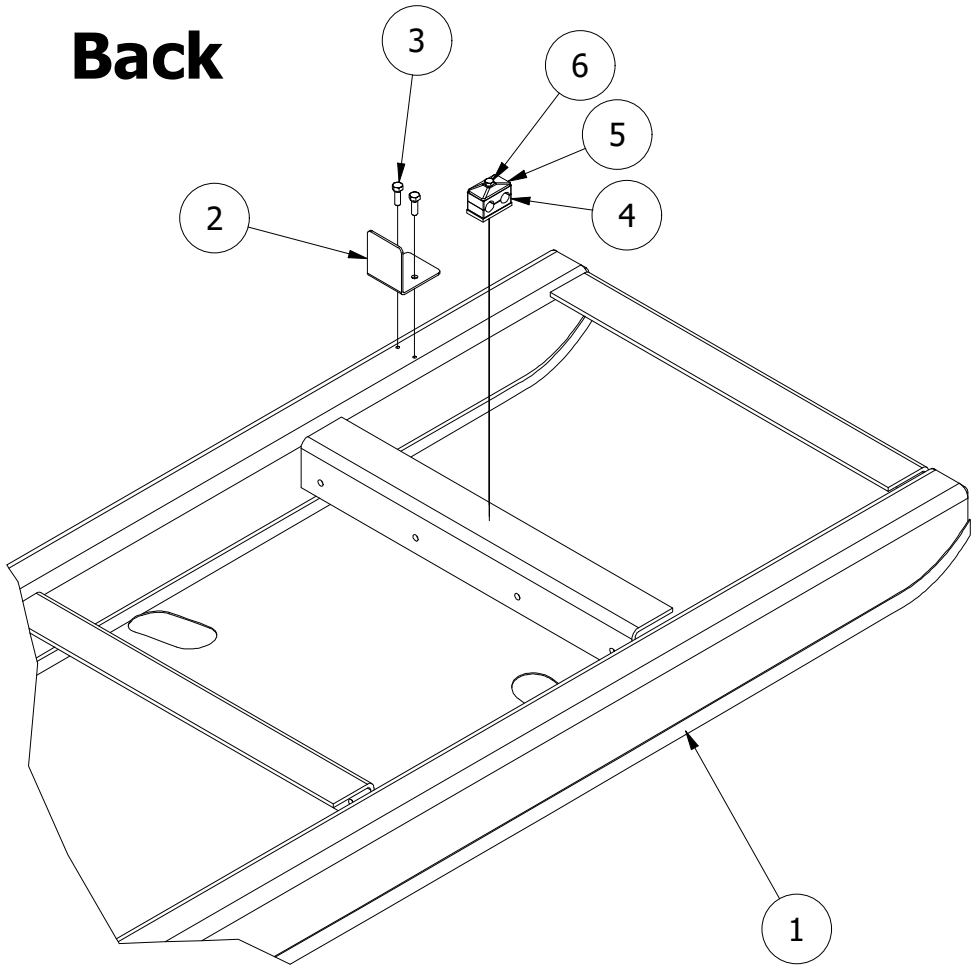

PARTS LIST			
ITEM	QTY	PART NUMBER	DESCRIPTION
1	1	6512AG	Stackframe Weldment
2	1	2410-430	Stack Frame Microswitch Trigger
3	2	5/16-18 X 1	Hex Bolt
4	16	1490-4437	3/8" Double Hose Clamp
5	8	1490-5140	3/8 Double Cover
6	8	1490-4743	3/8 Double Bolt

Stackframe Detail A

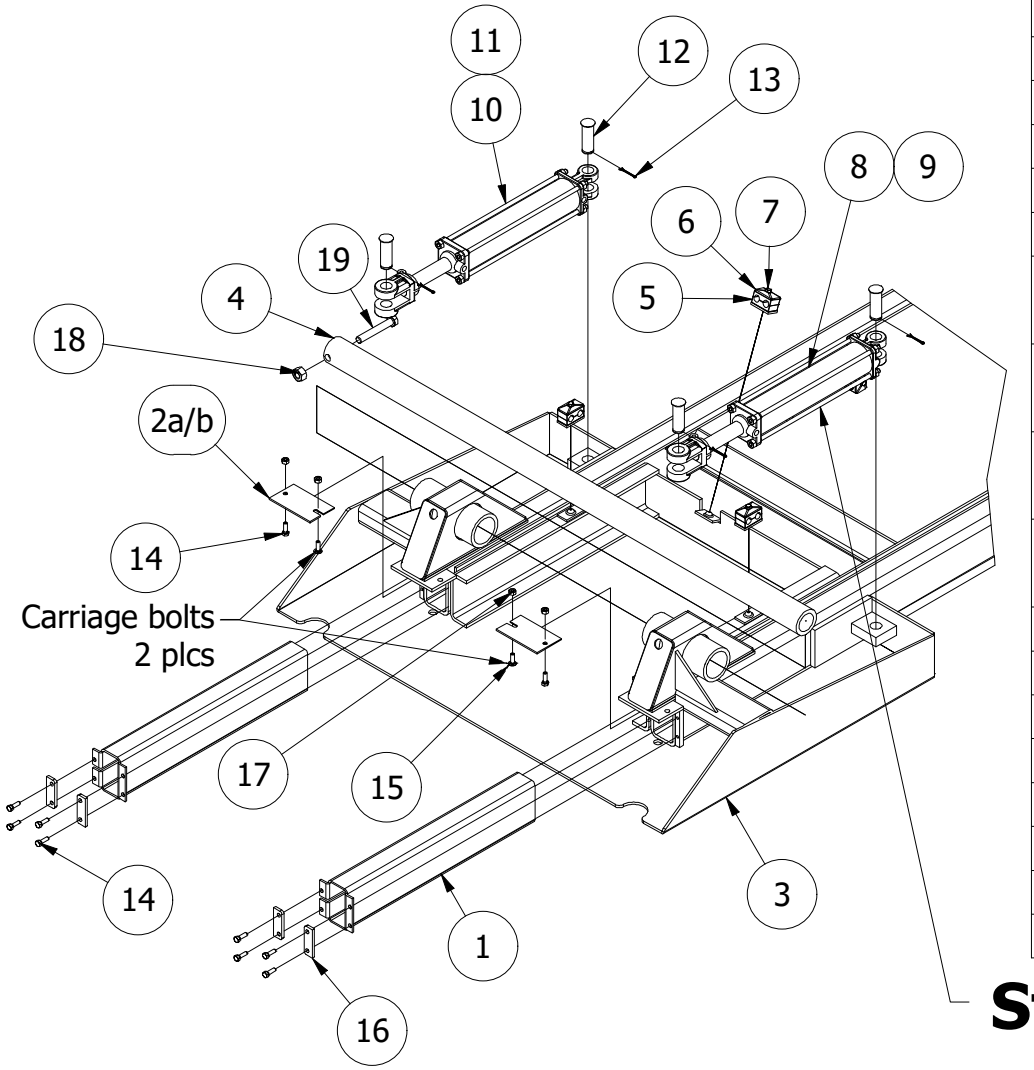

PARTS LIST			
ITEM	QTY	PART NUMBER	DESCRIPTION
1	2	2410-373	Poly Insert
2a	2	2410-368	Tailgate Wear Plate Steel
2b	2	2410-375	Stacking Tailgate Wear Plate Kit, (Plastic)
3	1	6512AG	Stackframe Weldment
4	1	2460-317	Rear Pivot Shaft
5	16	1490-4437	3/8" Double Hose Clamp
6	8	1490-5140	3/8 Double Cover
7	8	1490-4743	3/8 Double Bolt
8	1	1490-3063	RH Stackdown Cyl 2-1/2 x 10 x 1-1/4. SN# 950 and earlier
9	1	1490-8093	RH Stackdown Cyl 2-1/2 x 12 x 1-1/4. SN# 951 and Later
10	1	1490-3064	LH Stackdown Cyl 2-1/2 x 10 x 1-1/4. SN# 950 and earlier
11	1	1490-8094	RH Stackdown Cyl 2-1/2 x 12 x 1-1/4. SN# 951 and Later
12	4	1490-4566	1 x 2 3/4 Hard Pin
13	4	1490-4565	Pin, Cotter 5/32 x 2
14	12	5/16-18 X 1	Hex Bolt
15	2	Carriage Bolt	5/16 X 1 Carriage Bolt
16	4	2460-320	Squeeze Poly Strap
17	4	5/16 - 18	Hex Nut
18	1	5/8 Nut	5/8 Hex Nut
19	1	5/8 x 4 Bolt	5/8 x 4 Bolt

Stackdown Cylinder Details

Stackdown Cylinders

(1490-3063 & 1490-3064)
(1490-8093 & 1490-8094)

Back

Unit: 950 & Older
1490-3063 RH Pictured

Unit: 951 & Newer
1490-8093 RH Pictured

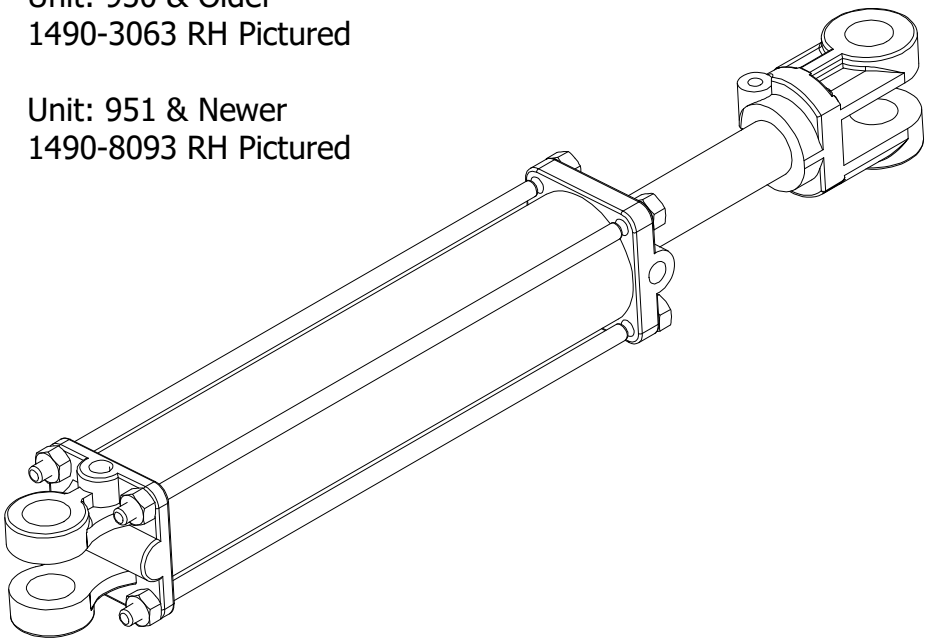

Home

Unit: 950 & Older
1490-3064 LH Rod end
ports from opposite sides

Unit: 951 & Newer
1490-8094 LH Rod end
ports from opposite sides

Use seal Kit #1490-1873

Stackframe

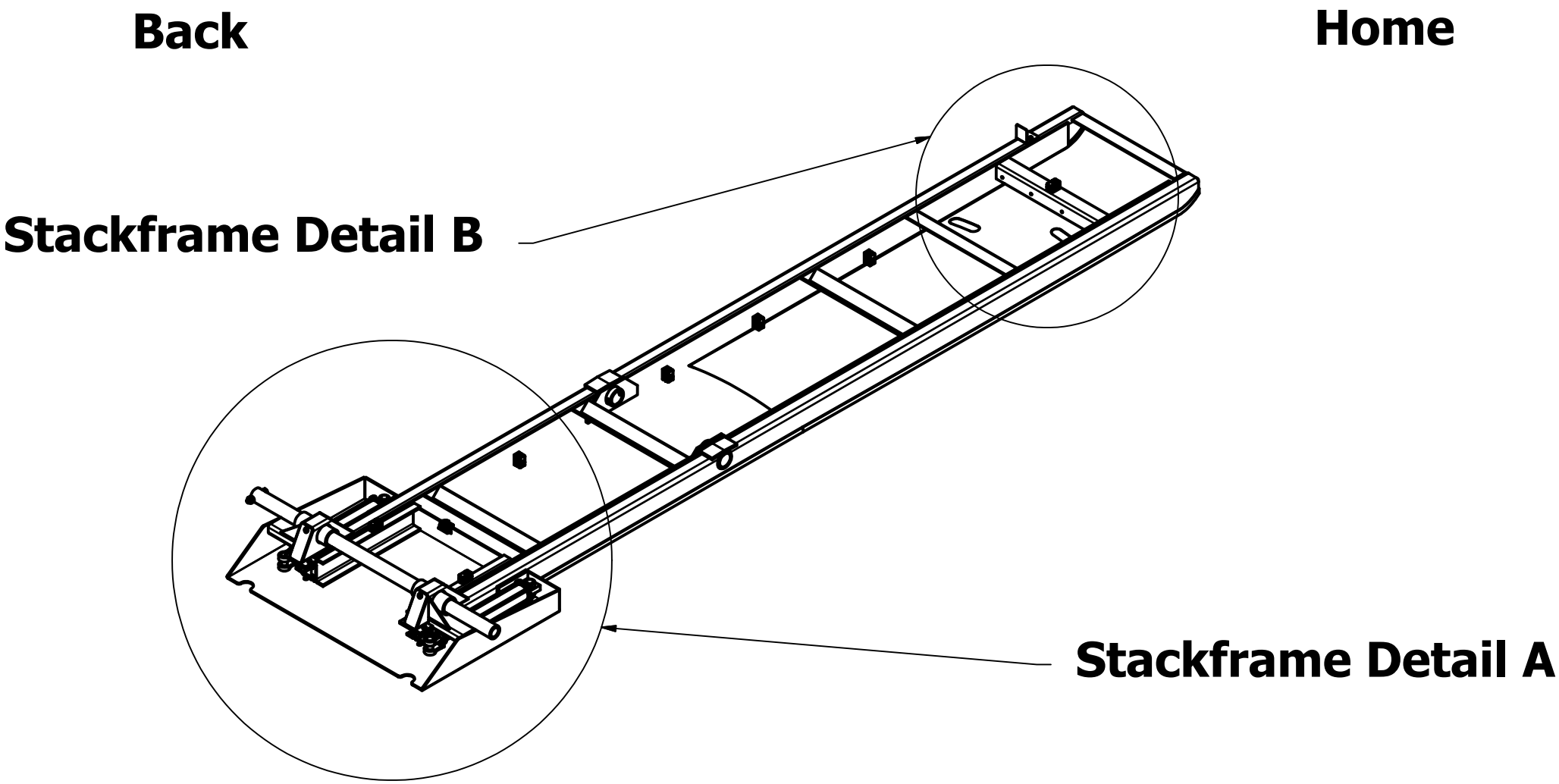

Grapple Cylinder Detail

Back

Home

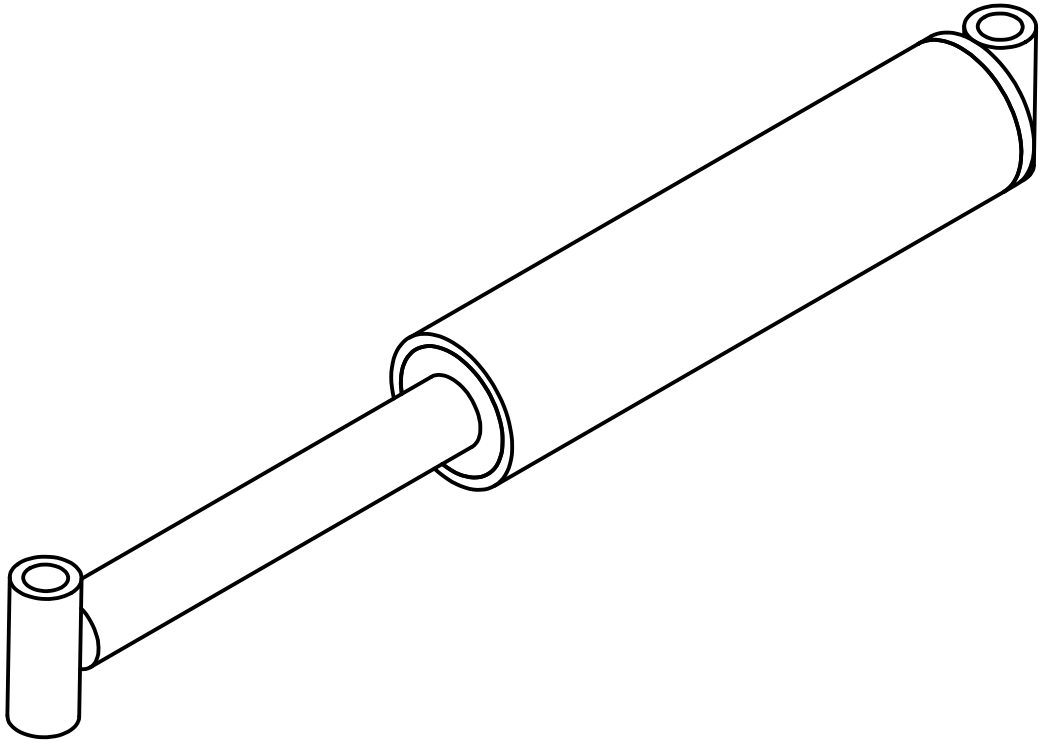

Grapple Cyl. Part Number
2414A2

Seal Kit Number
1490-6391

Grapple Detail

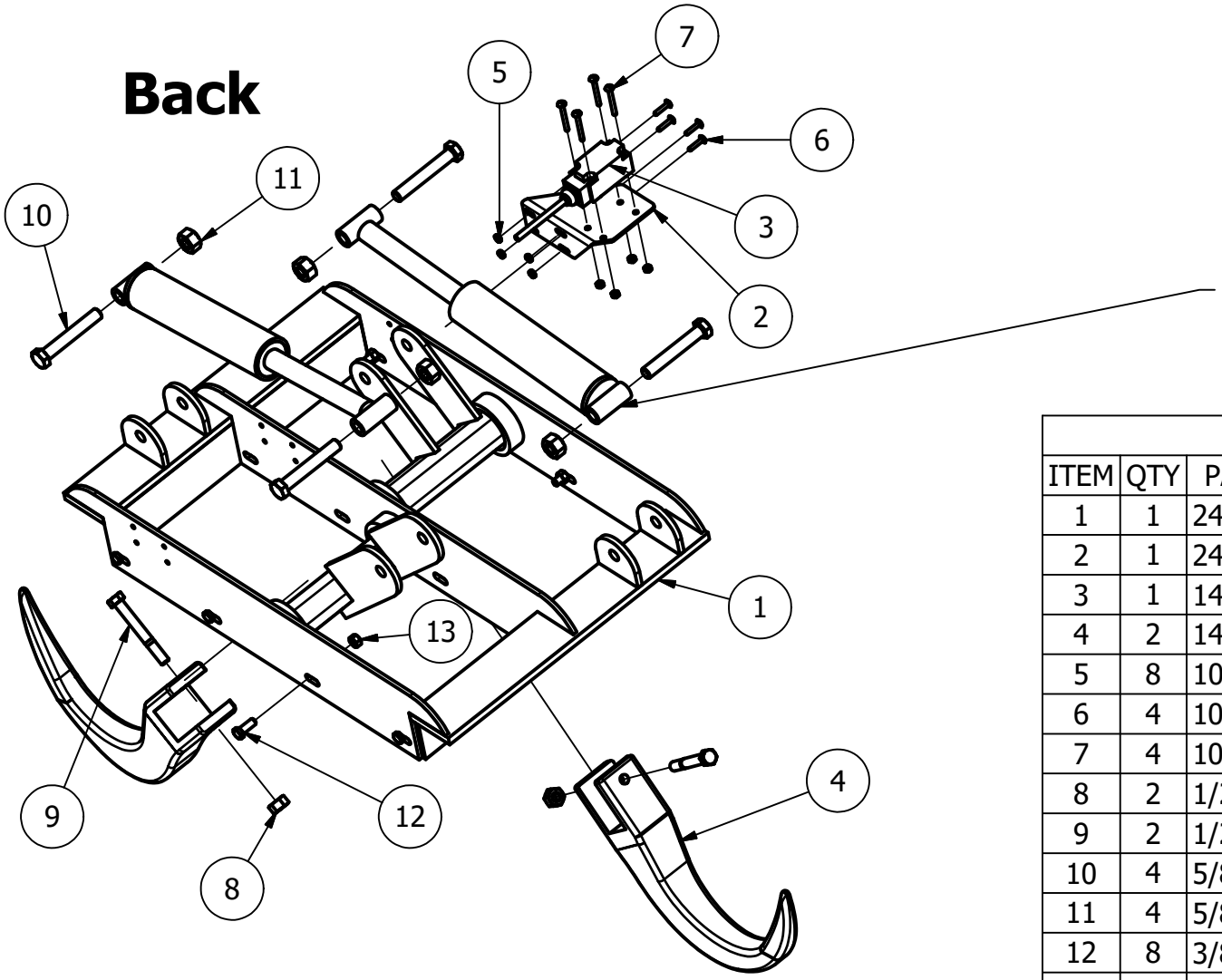

PARTS LIST			
ITEM	QTY	PART NUMBER	DESCRIPTION
1	1	2414A	Bolt On Grapple Assembly
2	1	2410-509	Limit Switch Bracket
3	1	1490-5764	Limit Switch w/Spring Arm
4	2	14902210	Grapple Tooth
5	8	10-24	Machine Nut
6	4	10-24 X 1	Machine Screw
7	4	10-24 X 2	Machine Screw
8	2	1/2-13 Nut	Hex Nut
9	2	1/2-13 X 4	Hex Bolt
10	4	5/8 X 4 Bolt	5/8 X 4 Bolt
11	4	5/8 Nut	5/8 Hex Nut
12	8	3/8 X 1	Bolt
13	8	3/8	Hex Nut

Complete Kit to add a Grapple 2009 and Newer - KIT:14806514

Frontend Control Valve

(1490-5871)

PARTS LIST			
ITEM	QTY	PART NUMBER	DESCRIPTION
1	2	1490-5926	Relief Valve Front Down
2	1	1490-5924	Relief Valve Front/Rear
3	2	1490-5919	Size 12 2-Way
4	4	1490-5918	Size 10 2-Way
5	2	1490-5922	Size 10 Check Valve
6	2	1490-5923	Size 08 Check Valve
7	2	1490-5921	Pilot Check Cartridge Valve
8	6	1490-5920	SV Coil

Back

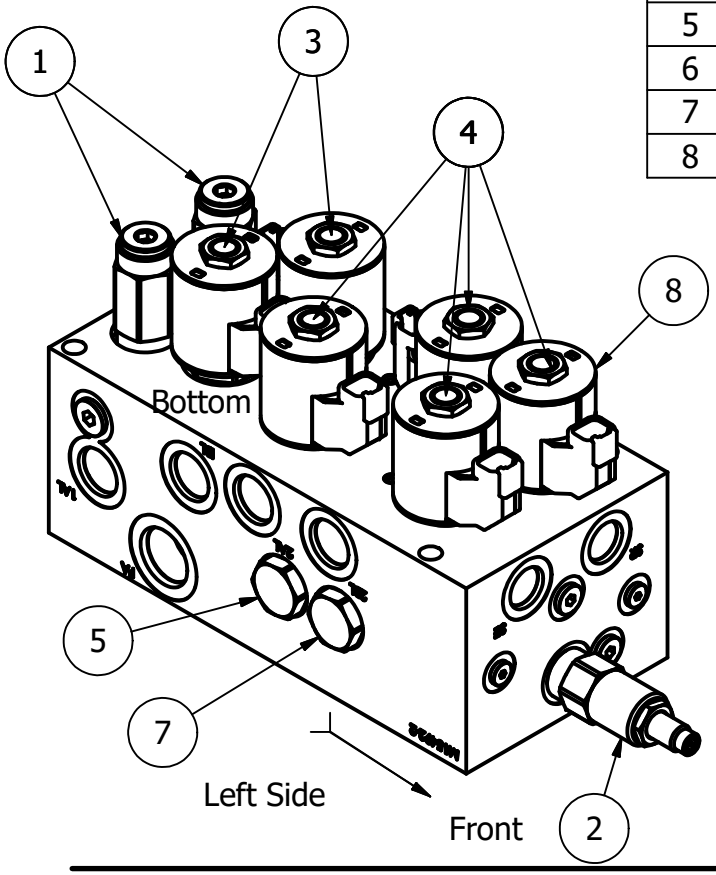

Home

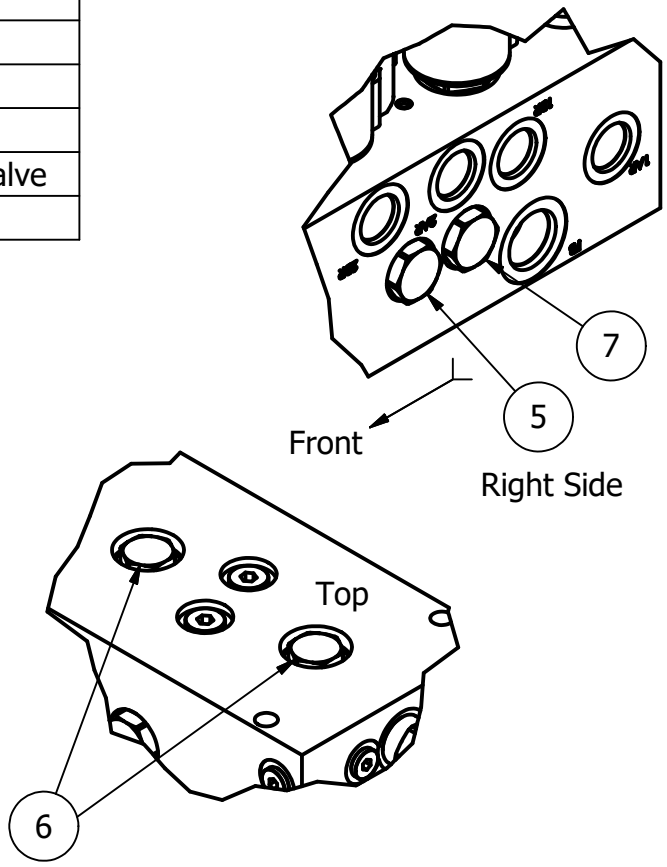

Main Control Valve

(Complete Assy 1490-5870_6500)

Back **Home**

PARTS LIST			
ITEM	QTY	PART NUMBER	DESCRIPTION
1	2	1490-5917	EHPR #8 Coil
2	1	1490-5925	Relief Valve Main
3	2	1490-5918	Size 10 2-Way
4	1	1490-6305	#8 Prop. Valve
5	2	1490-5916	EHPR Proportional Relief
6	2	1490-6785	12VDC #8 ER Coil
7	1	1490-6569	Shuttle Valve
8	2	1490-5920	12VDC #10 ER Coil
9	1	1490-6306	#8 Cartridge Valve
10	1	1490-6302	Main 4-way control valve
11	1	1490-6199	Flow Regulator 1.25 gal/min
12	1	1490-6225	#10 Orifice Disk .125
13	2	1490-5998	SENSOR AMP 100PSI .5-4.5VDC OUT

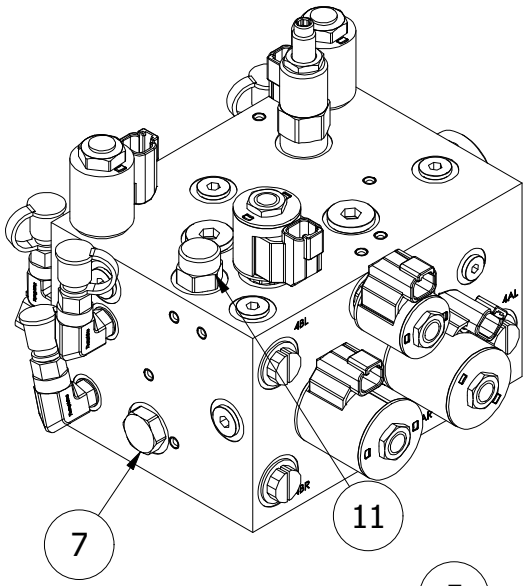

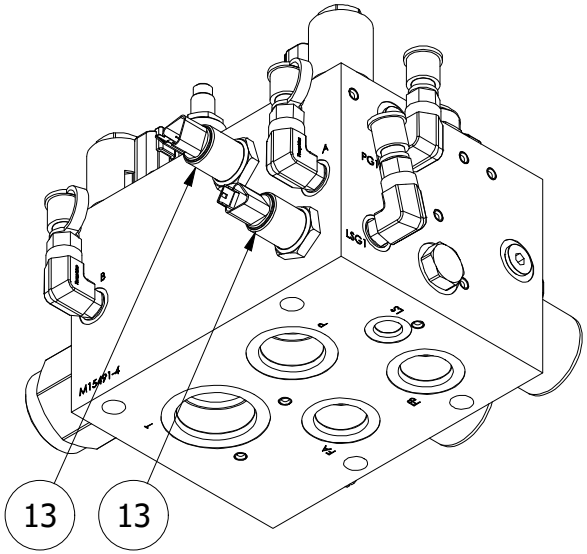

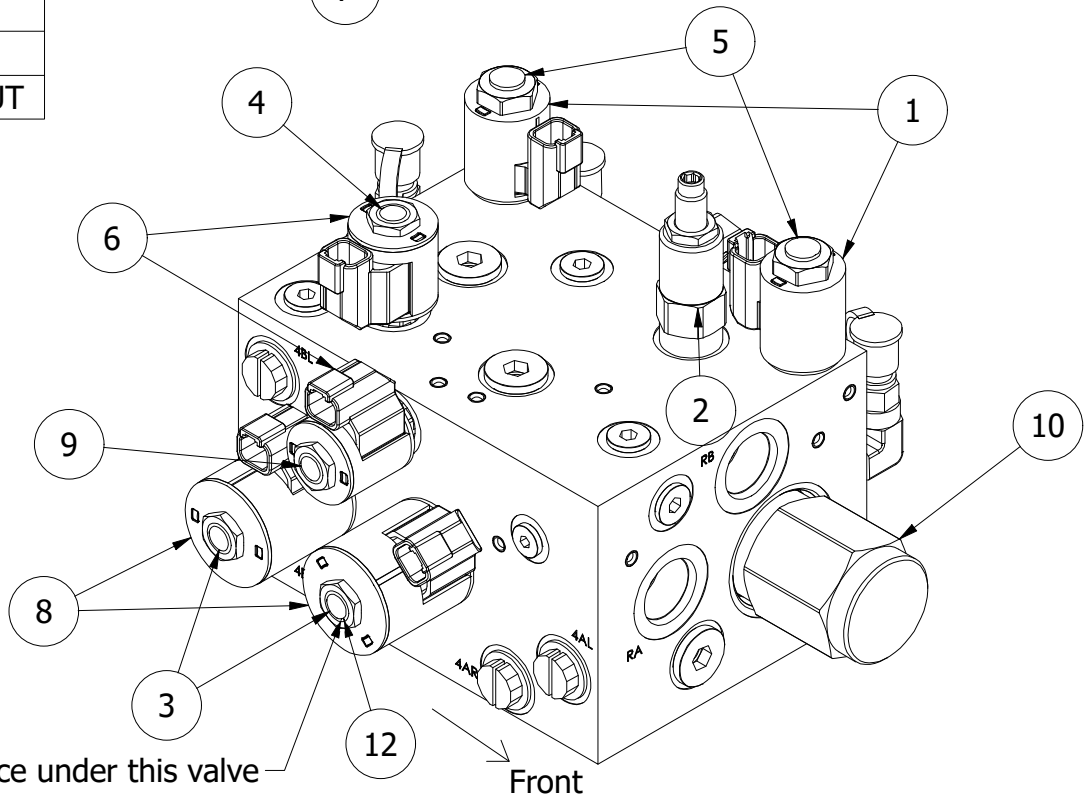

Rear Control Valve

(1490-5873)

Back

PARTS LIST			
ITEM	QTY	PART NUMBER	DESCRIPTION
1	12	1490-5918	Size 10 2-Way
2	12	1490-5920	SV Coil
3	1	1490-5924	Relief Valve Front/Rear

Home

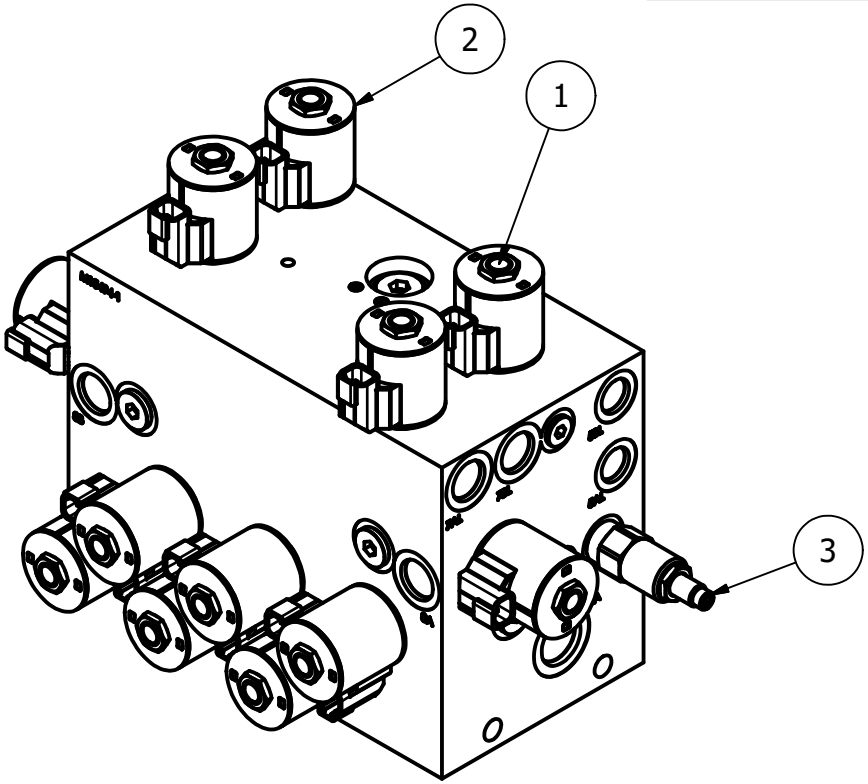

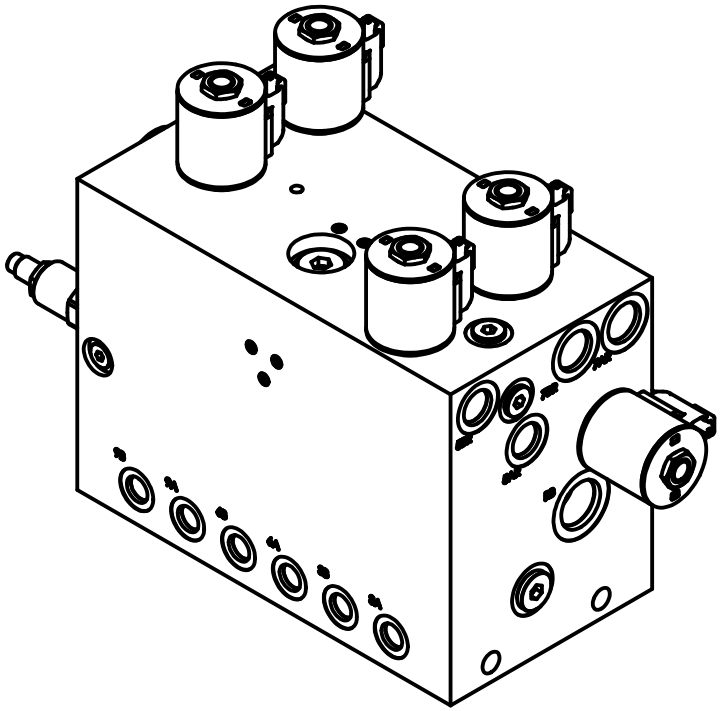

1/4 Turn Control Valve

(1490-5872 Complete Assy)

Back

PARTS LIST			
ITEM	QTY	PART NUMBER	DESCRIPTION
1	2	1490-5918	Size 10 2-Way
2	1	1490-5922	Size 10 Check Valve
3	1	1490-5921	Pilot Check Cartridge Valve
4	2	1490-6588	SV Coil

Home

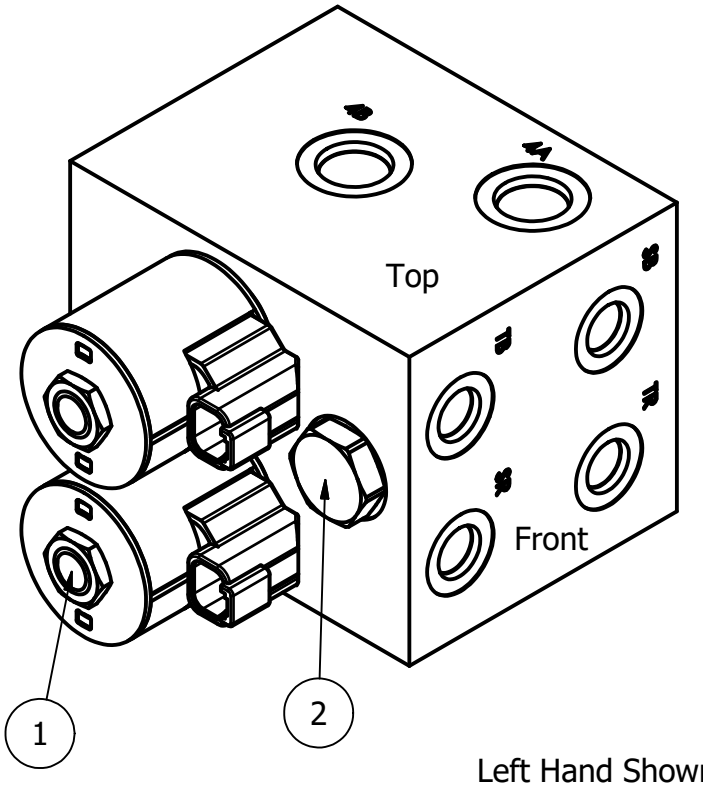

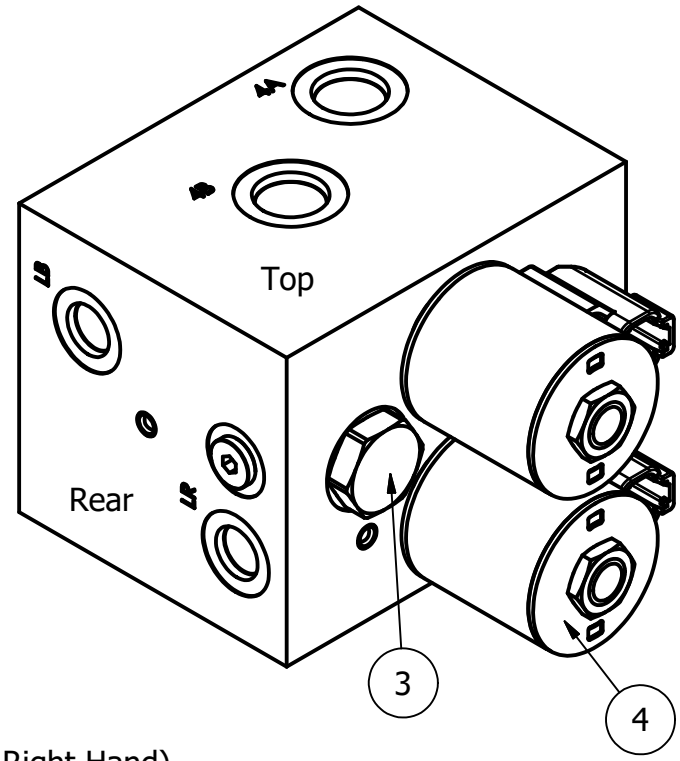

Left Hand Shown (Ports 4A & 4B plumb on opposite side for Right Hand)

1/4 Turn Detail

Back

Home

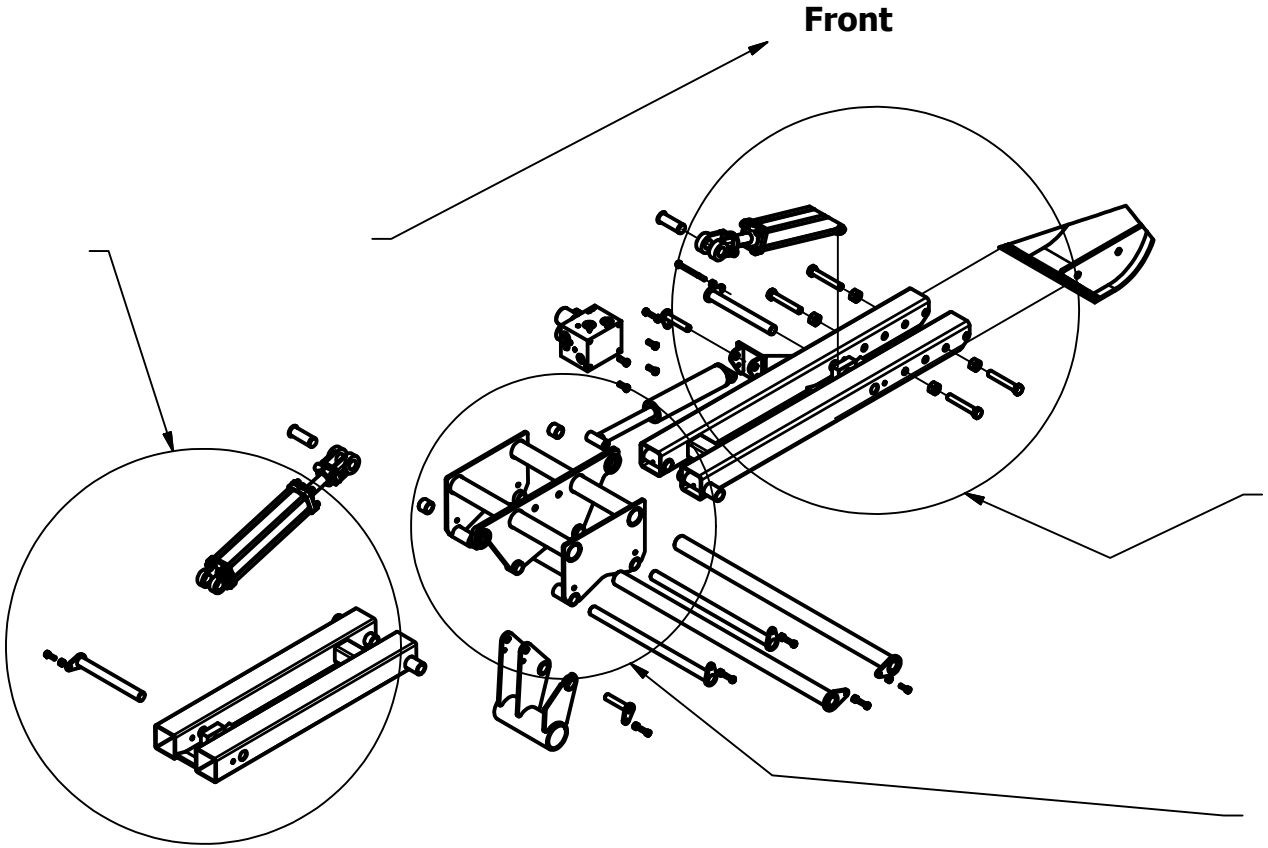

1/4 Turn Detail A

1/4 Turn Cylinders

1/4 Turn Detail C

1/4 Turn Detail B

1/4 Turn Cylinders

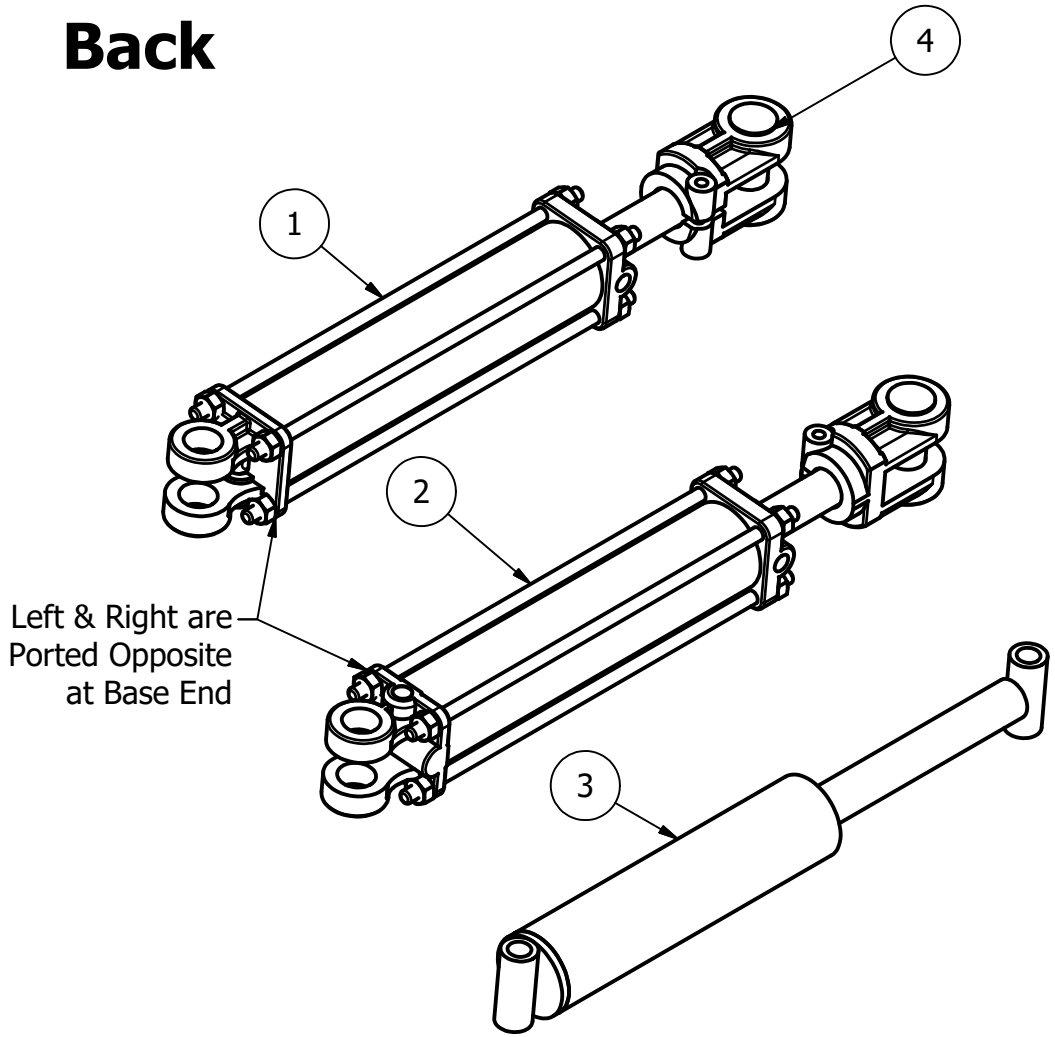

PARTS LIST			
ITEM	QTY	PART NUMBER	DESCRIPTION
1	2	1490-5146	RF & LR 1/4 Turn Cyl
2	2	1490-5145	LF & RR 1/4 Turn Cyl.
3	2	2414A2	Grapple Cylinder Assembly
4	4	1490-4566	1 X 2-3/4 Cylinder Pin
5	4	Cotter Pin	1/8 X 1-3/8 Cotter Pin

1490-5145 & 1490-5146 Use
Seal Kit # 1490-4627

The 2414A2 Cylinder Uses
Seal Kit #1490-6391

1/4 Turn Detail A

Back **Home**

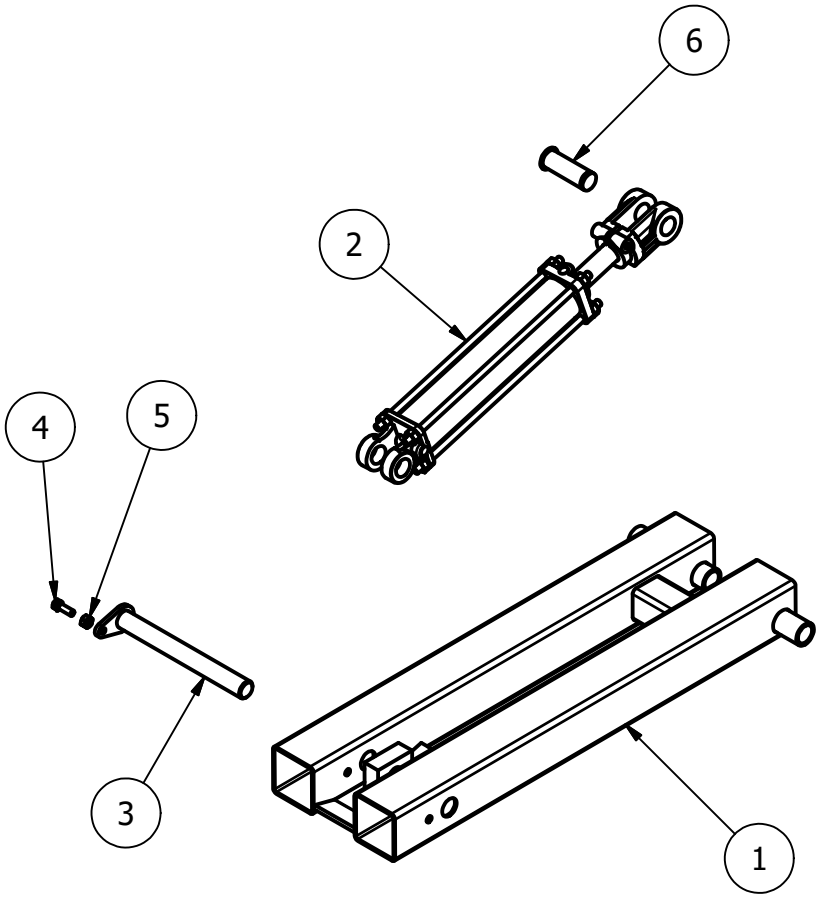

PARTS LIST			
ITEM	QTY	PART NUMBER	DESCRIPTION
1	2	5580A4	500 Series Let Down Arm Assembly
2	2	1490-5146	RF & LR 1/4 Turn Cyl
3	4	5580A7	Cylinder Pin Assy
4	14	5/16-18 X 1	Hex Bolt
5	16	5/16 - 18	Hex Nut
6	4	1490-4566	1 X 2-3/4 Cylinder Pin

1/ 4 Turn Detail B

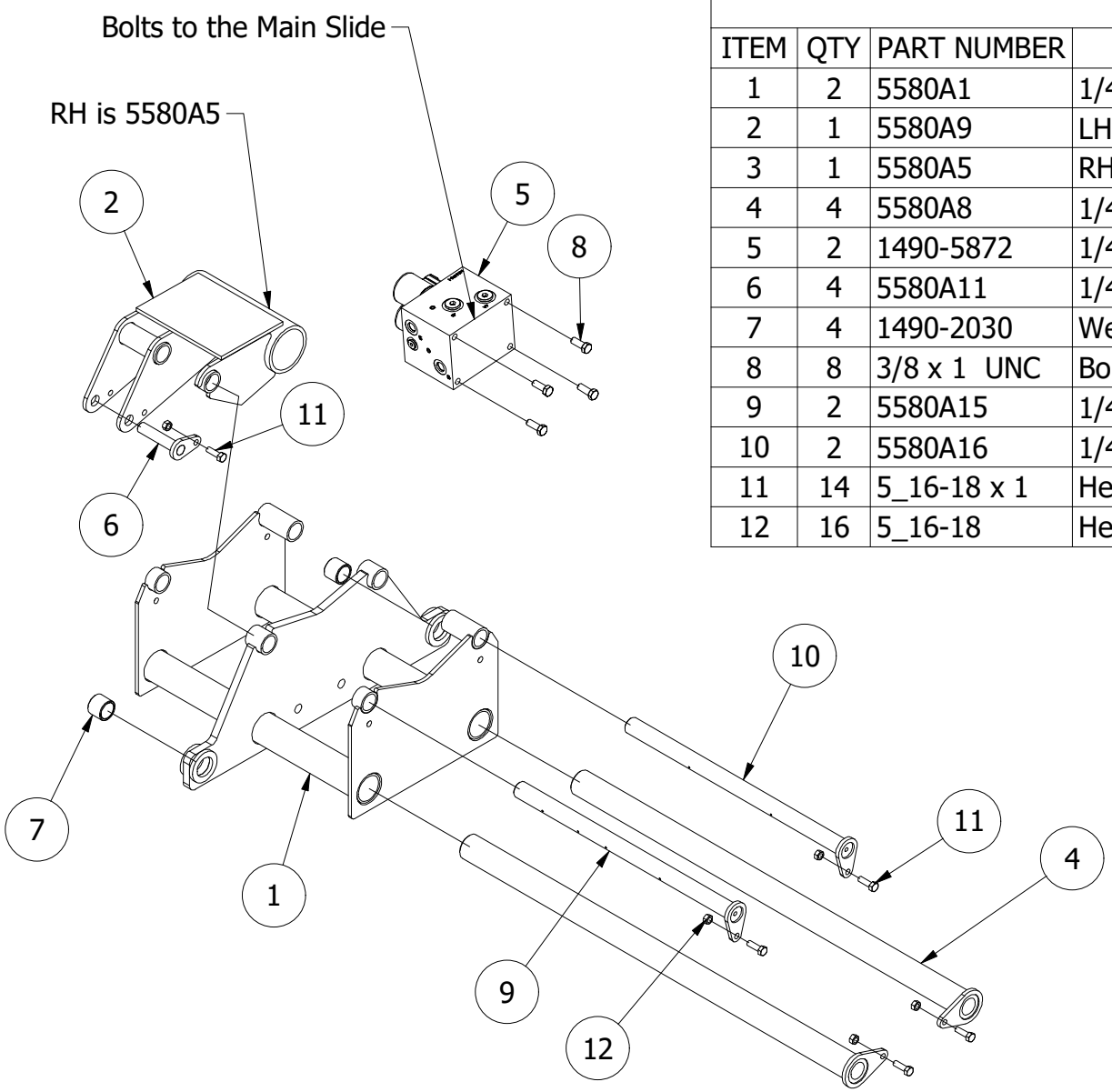

PARTS LIST			
ITEM	QTY	PART NUMBER	DESCRIPTION
1	2	5580A1	1/4 Turn Letdown Main Pivot Assembly
2	1	5580A9	LH 1/4 Turn Stop
3	1	5580A5	RH 1/4 Turn Stop (Not Shown)
4	4	5580A8	1/4 Turn & Letdown Mounting Shaft Assembly
5	2	1490-5872	1/4 Turn Control Valve
6	4	5580A11	1/4 Turn Bale Stop Cylinder Mounting Pin Assy
7	4	1490-2030	Wear Bushing
8	8	3/8 x 1 UNC	Bolt
9	2	5580A15	1/4 Turn Auto-Lube Pin (Raise) (Front) 4 Holes
10	2	5580A16	1/4 Turn Auto-Lube Pin (Letdown) (Back) 2 Holes
11	14	5_16-18 x 1	Hex Bolt
12	16	5_16-18	Hex Nut

Control Valve Detail

1/4 Turn Detail C

Back **Home**

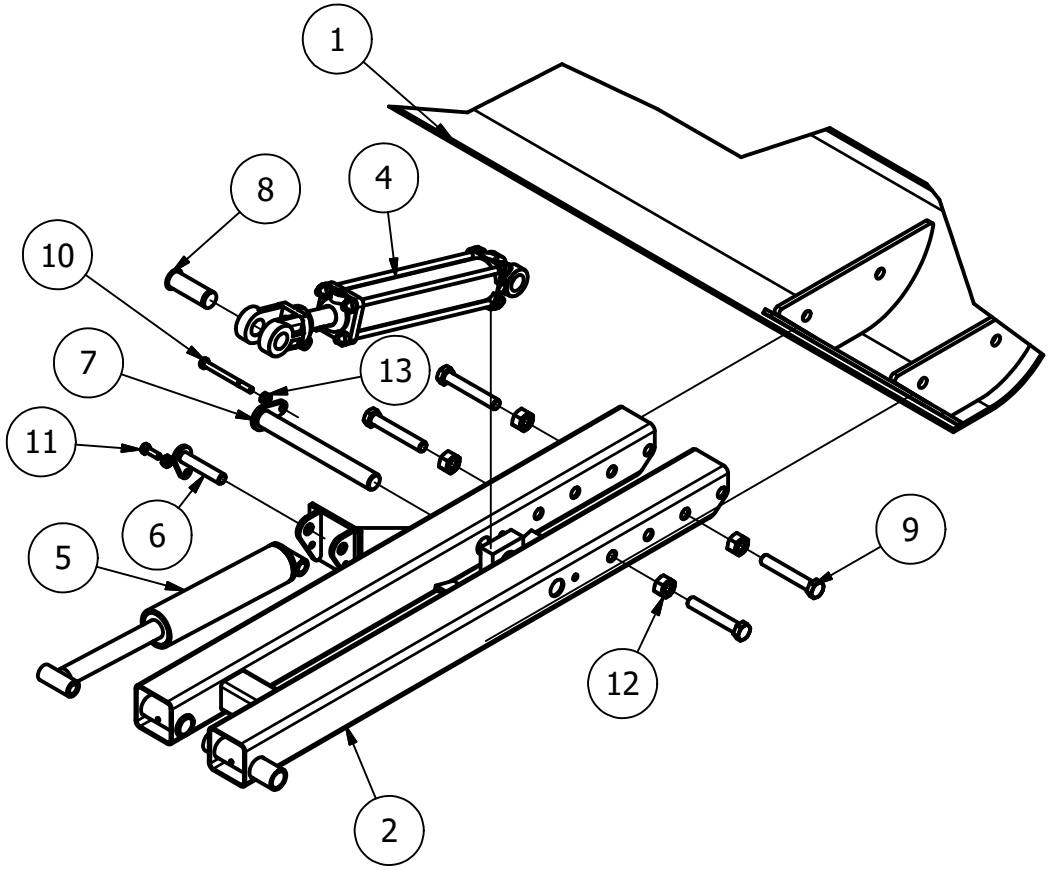

PARTS LIST			
ITEM	QTY	PART NUMBER	DESCRIPTION
1	1	5580A10	1/4 Turn Nose Cap Assembly
2	1	5580A3	LH 1/4 Turn Arm Assy
3	1	5580A2	RH 1/4 Turn Arm Assy (Not Shown)
4	2	1490-5145	LF & RR 1/4 Turn Cyl.
5	2	2414A2	Grapple Cylinder Assembly
6	4	5580A11	Bale Stop Cyl Mount Pin Assy
7	4	5580A7	Cylinder Pin Assy
8	4	1490-4566	1 X 2-3/4 Cylinder Pin
9	8	5/8 X 4 Bolt	5/8 X 4 Bolt
10	2	5/16 X 3-3/4	5/16 X 3-3/4 Hex Bolt
11	14	5/16-18 X 1	Hex Bolt
12	8	5/8 Nut	5/8 Hex Nut
13	16	5/16 - 18	Hex Nut

Stinger 6500 Stacker

Cage and Engine Doors

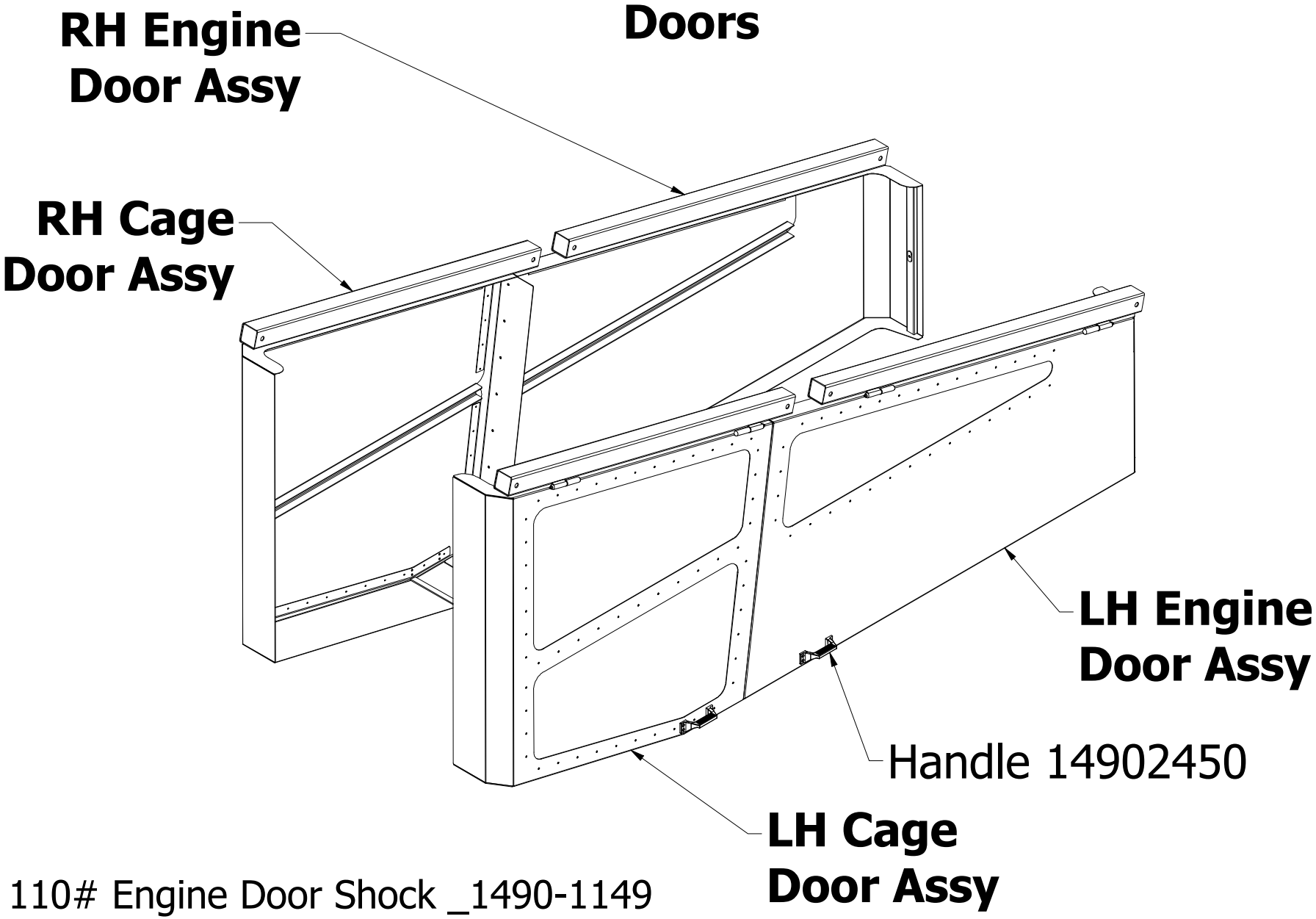

Stinger 6500 Stacker

LH Cage Door Assy

(6550A9)

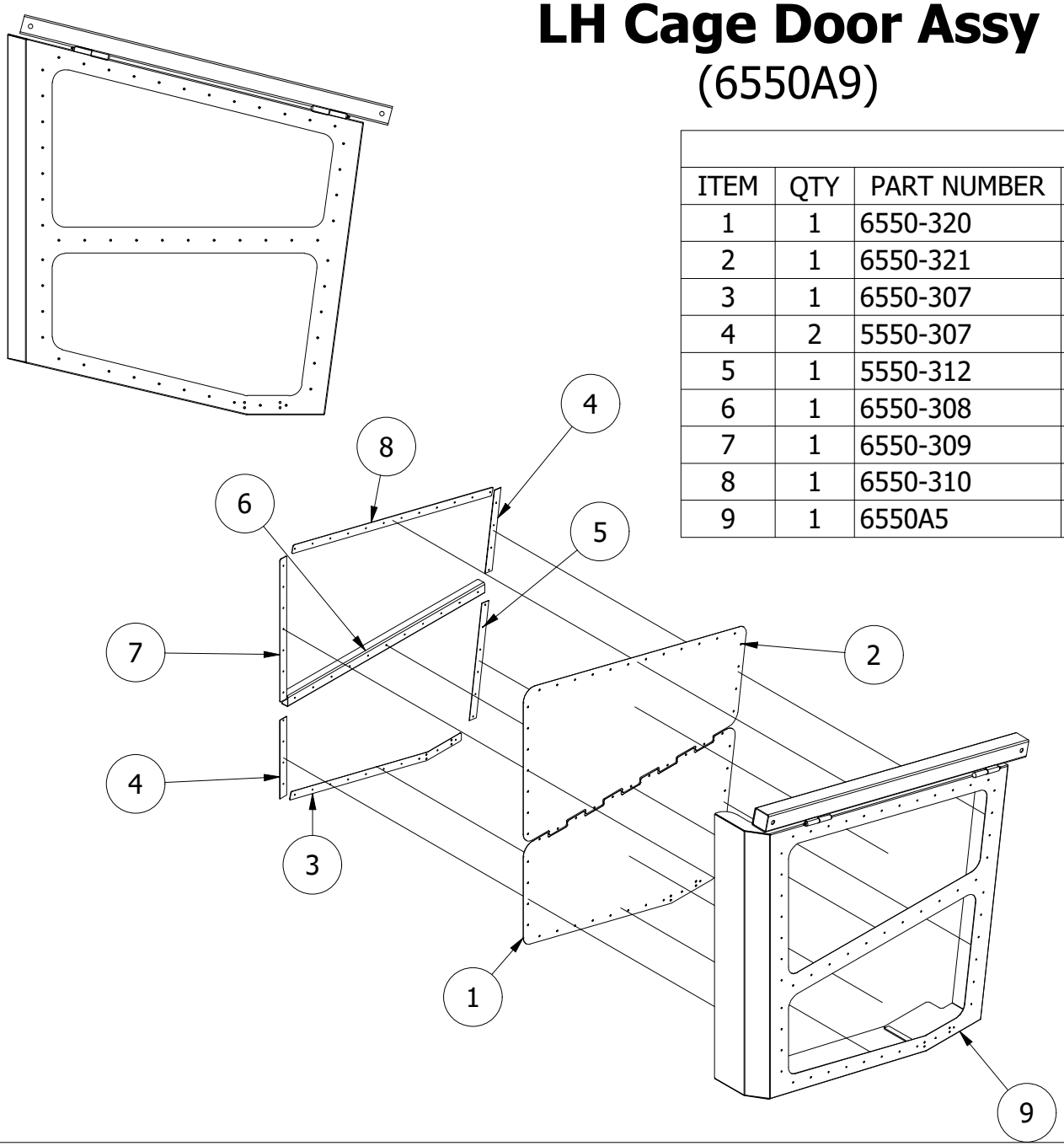

PARTS LIST			
ITEM	QTY	PART NUMBER	DESCRIPTION
1	1	6550-320	6500 T4 Bottom Cage Door Screen
2	1	6550-321	6500 T4 Top Cage Door Screen
3	1	6550-307	6500 T4 Cage Door Lower Mounting Strap
4	2	5550-307	Engine Door Screen Front Mounting Strap
5	1	5550-312	Cage Door Screen Front Mounting Strap
6	1	6550-308	6500 T4 Cage Screen Channel (11 Hole)
7	1	6550-309	Cage Door Screen Mounting Strap (7 hole)
8	1	6550-310	Cage Door Screen Mounting Strap (12 hole)
9	1	6550A5	6500 T4 LH Front Engine Door

Door Seal 1490-4951 Inches Needed

Stinger 6500 Stacker

RH Cage Door Assy
(6550A10)

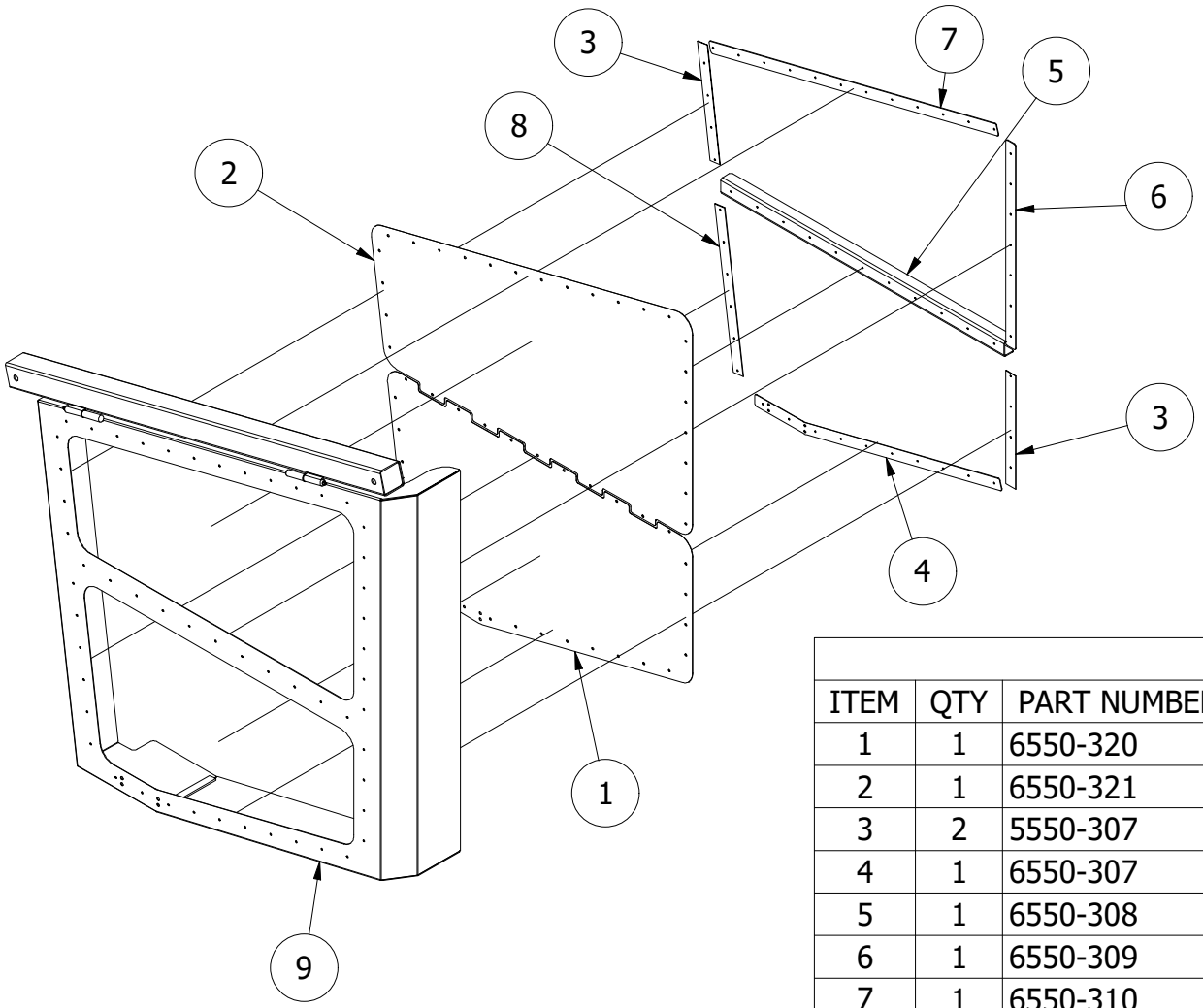

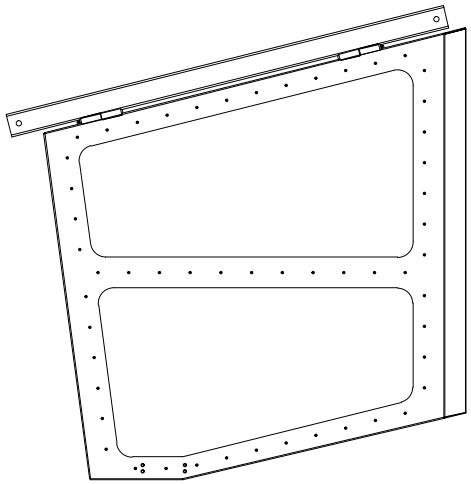

Door Seal 1490-4951 Inches Needed

PARTS LIST			
ITEM	QTY	PART NUMBER	DESCRIPTION
1	1	6550-320	6500 T4 Bottom Cage Door Screen
2	1	6550-321	6500 T4 Top Cage Door Screen
3	2	5550-307	Engine Door Screen Front Mounting Strap
4	1	6550-307	6500 T4 Cage Door Lower Mounting Strap
5	1	6550-308	6500 T4 Cage Screen Channel (11 Hole)
6	1	6550-309	Cage Door Screen Mounting Strap (7 hole)
7	1	6550-310	Cage Door Screen Mounting Strap (12 hole)
8	1	5550-312	Cage Door Screen Front Mounting Strap
9	1	6550A6	6500 T4 RH Front Engine Door

Stinger 6500 Stacker

RH Engine Door Assy
(6550A12)

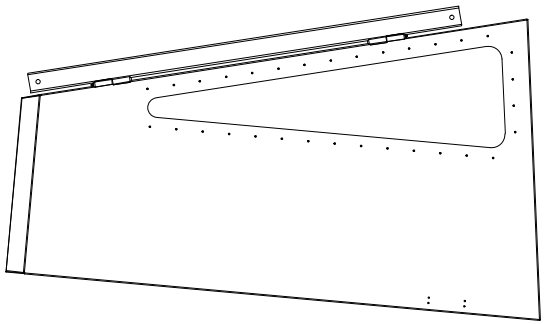

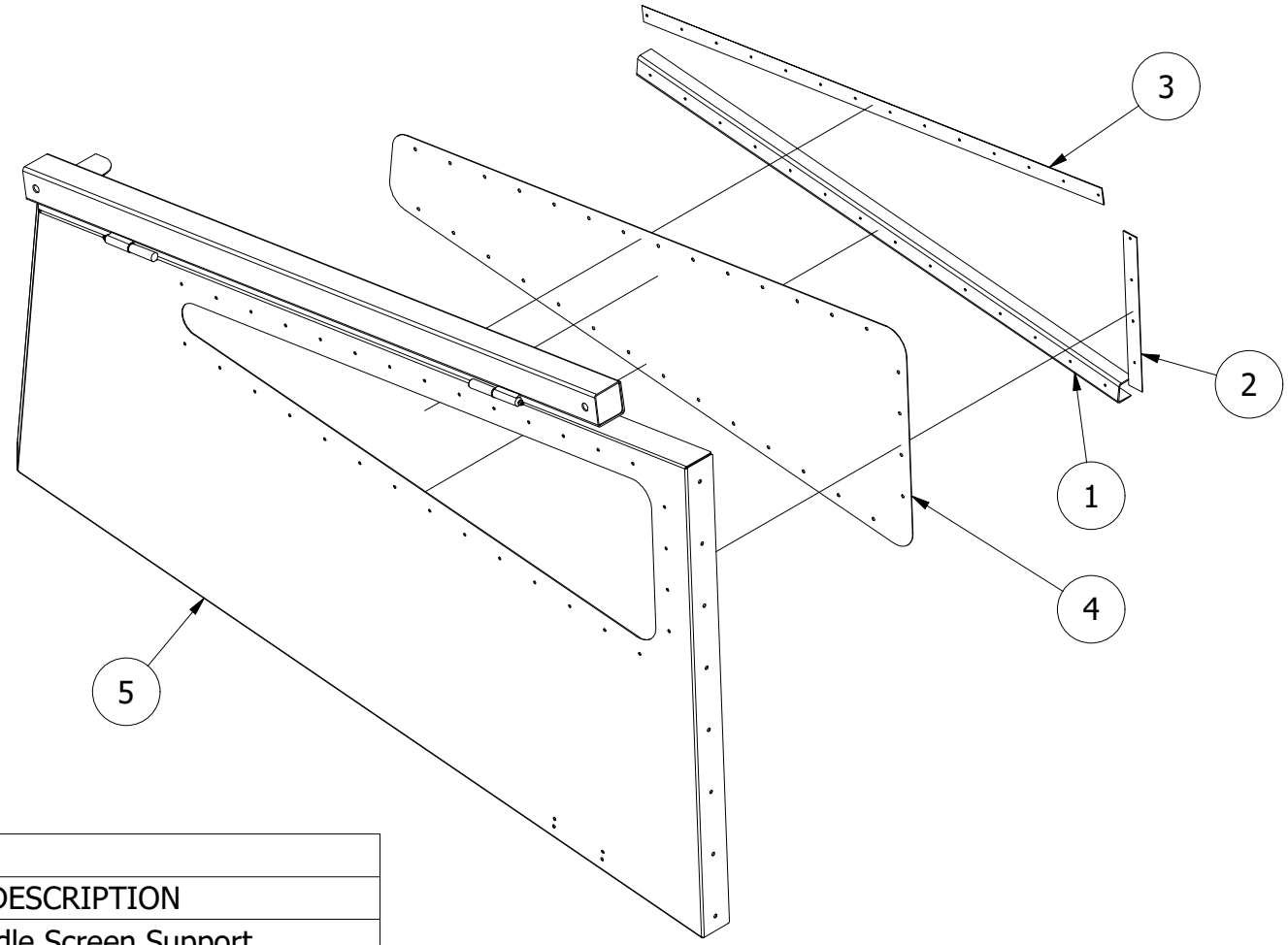

Safety Edge 1490-2027 Inches Needed

Door Seal 1490-4951 Inches Needed

PARTS LIST			
ITEM	QTY	PART NUMBER	DESCRIPTION
1	1	5550-305	Cage Door Middle Screen Support
2	1	5550-307	Engine Door Screen Front Mounting Strap
3	1	5550-313	Cage Door Screen Top Mounting Strap
4	1	6550-322	6500 T4 Engine Door Screen
5	1	6550A8	6500 T4 RH Rear Engine Door

LH Engine Door Assy

(6550A11)

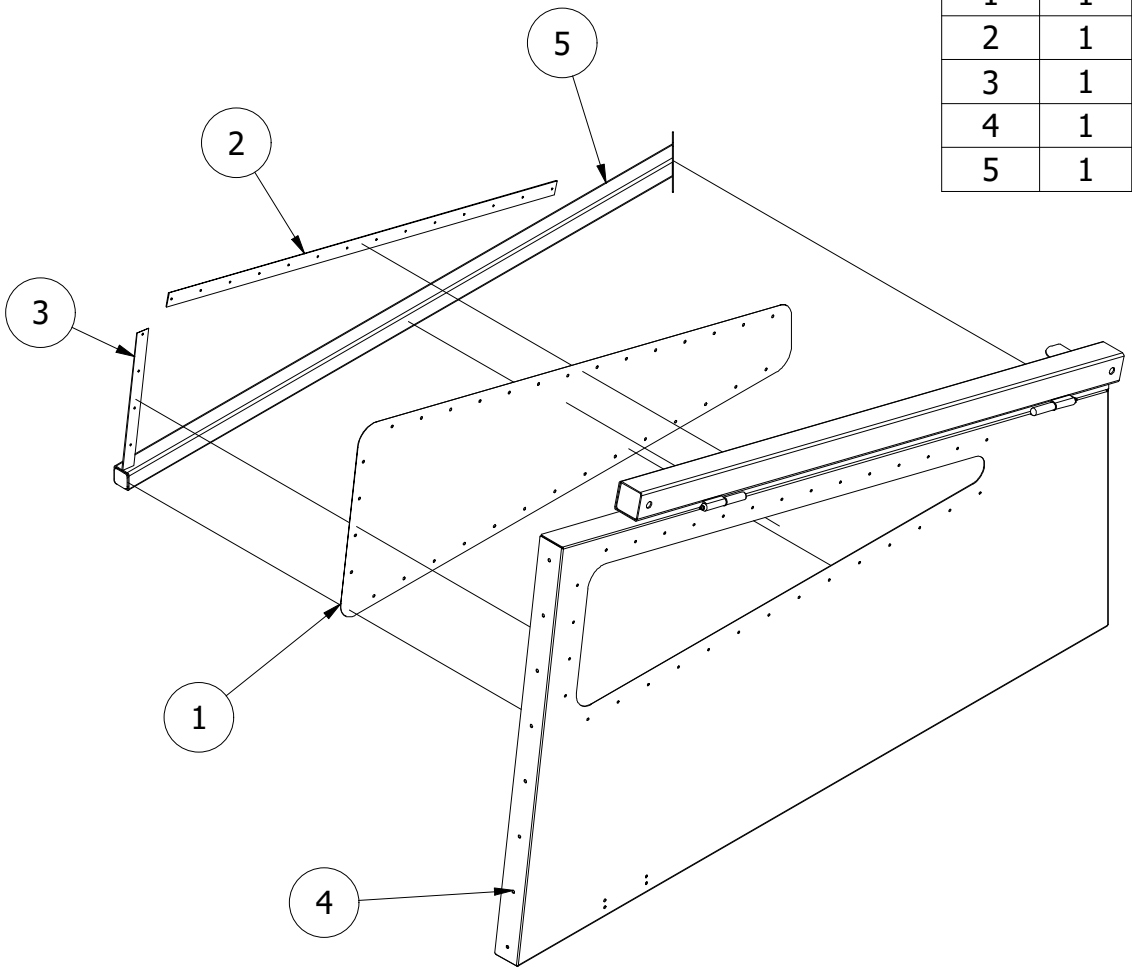

PARTS LIST			
ITEM	QTY	PART NUMBER	DESCRIPTION
1	1	6550-322	6500 T4 Engine Door Screen
2	1	5550-313	Cage Door Screen Top Mounting Strap
3	1	5550-307	Engine Door Screen Front Mounting Strap
4	1	6550A7	6500 T4 LH Rear Engine Door
5	1	6550A14	6500 Engine Door Screen Tube

Safety Edge 1490-2027 Inches Needed

Door Seal 1490-4951 Inches Needed

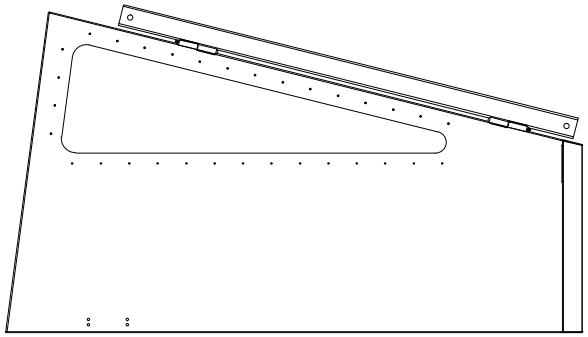

Subframes

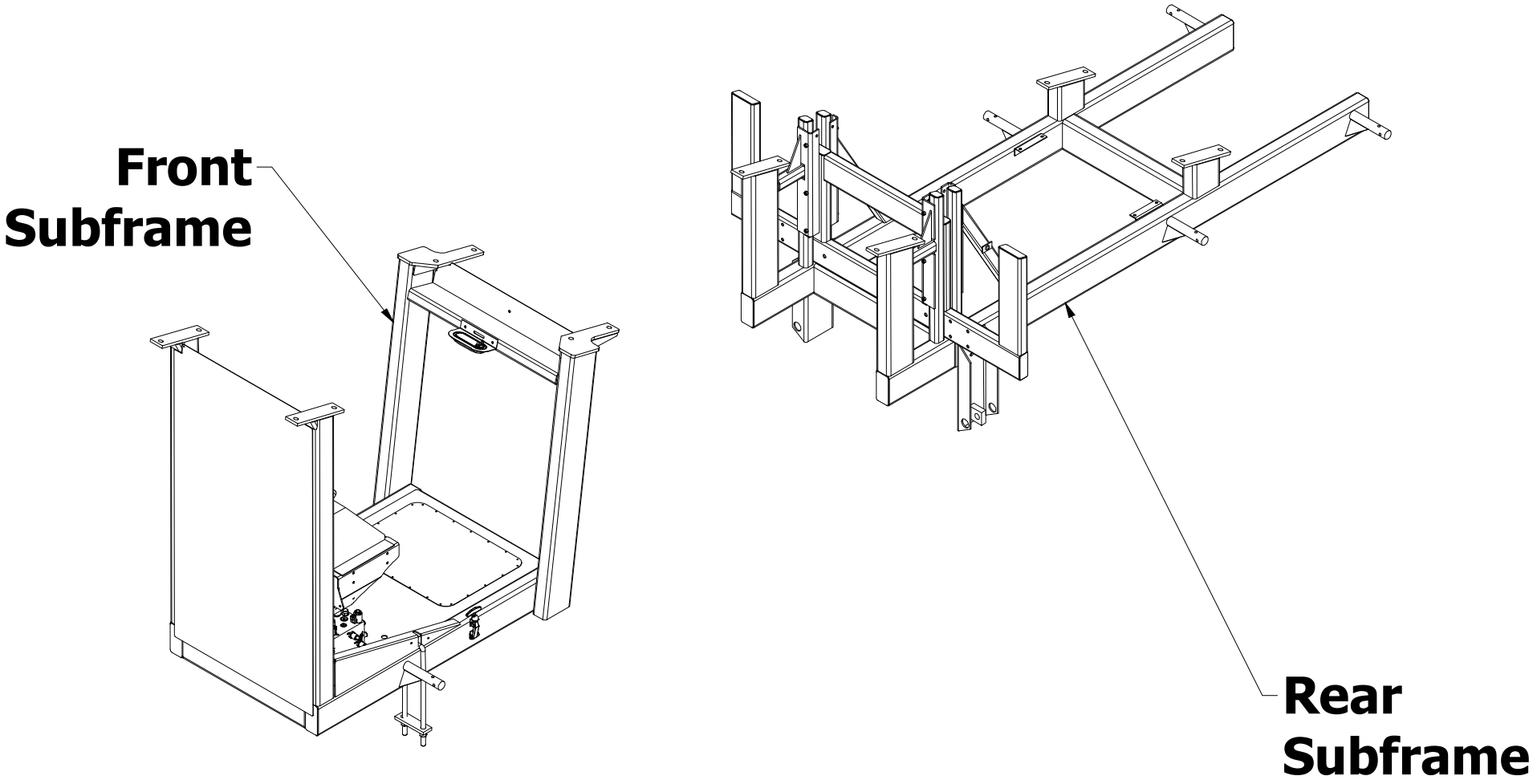

Rear Sub-Frame Detail

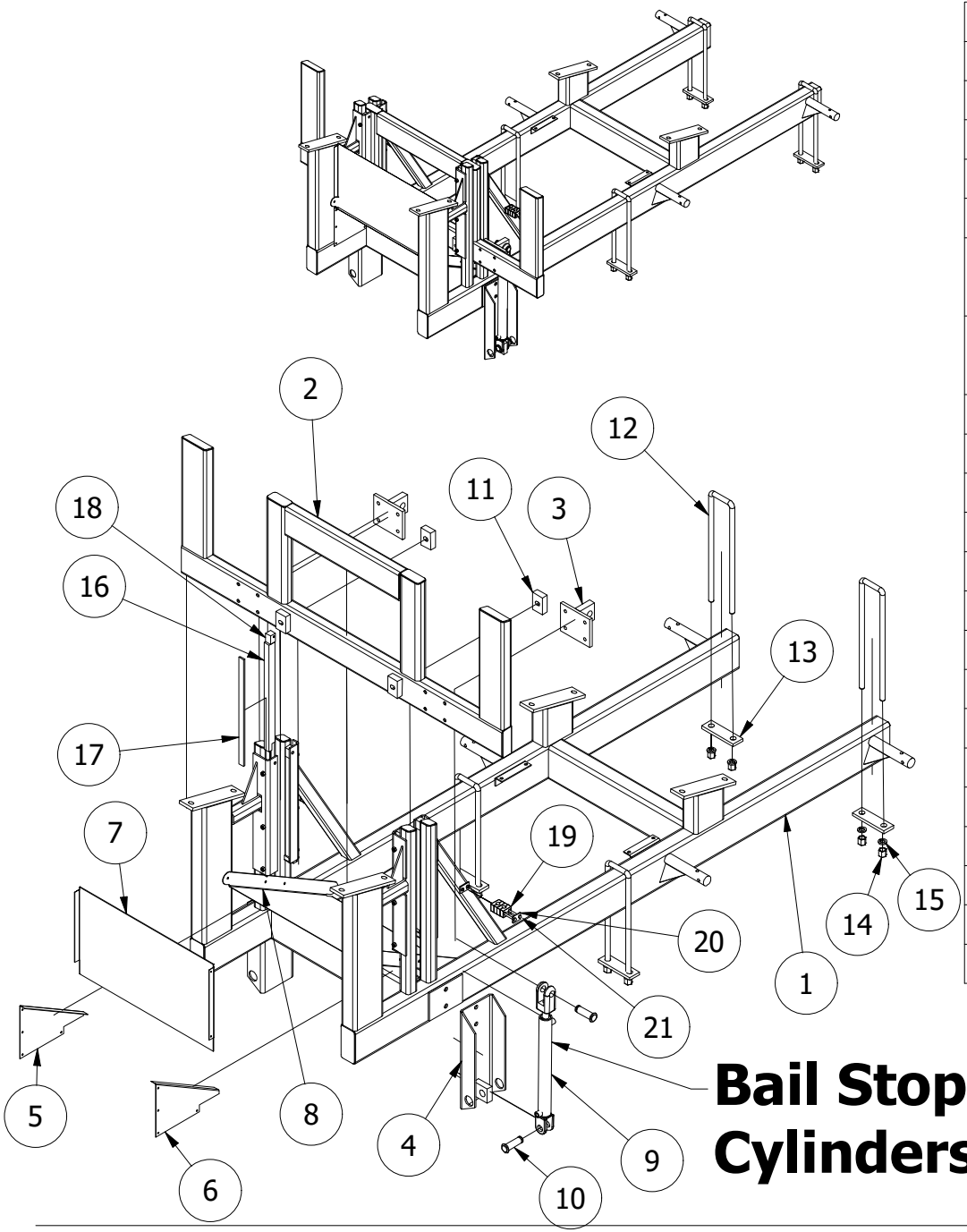

PARTS LIST			
ITEM	QTY	PART NUMBER	DESCRIPTION
1	1	6550AMR3	Rear Stacking Sub-Frame Assy
2	1	6562A	Bale Stop for Dual Cylinders
3	2	2465A	Bale Stop Cylinder Mount
4	2	6552A	Dual Bale Stop Cylinder Lower Mount
5	1	5550-332	Rear Engine Compartment Side Screen RH
6	1	5550-333	Rear Engine Compartment Side Screen LH
7	1	5550-334	Rear Engine Compartment Screen
8	1	6550-248	Bale Stop Deflector Shield New Style
9	2	1490-5908	Welded Bale Stop Cylinder
10	4	1490-4566	1 x 2 3/4 Hard Pin
11	4	2460-399	Bale Stop Poly Block
12	4	1490-2015	3/4x3-1/2x19 U-Bolts SQ Top
13	4	1400-110	U-Bolt Plate
14	8	1490-2017	HiNuts for U-Bolts
15	8	.75 Lock Washer	Helical Spring Lock Washer
16	4	6550-105	Bale Stop Poly Wear Block (Long)
17	4	6550-107	Poly Support Plate
18	4	6550-112	Bale Stop Poly Block
19	8	14904324	3/8 Single Clamp
20	2	14904910	3/8 Single Cover
21	4	.25-20 X 2-.75	Hex Head Cap Screw

Bale Stop Cylinder

Part # 1490-5031 (Old Tie Rod Type 2 X 14)

Back **Part # 1490-5908** (New Welded Type 1-$\frac{1}{2}$ X 14) **Home**

Seal Kit # 1490-4627

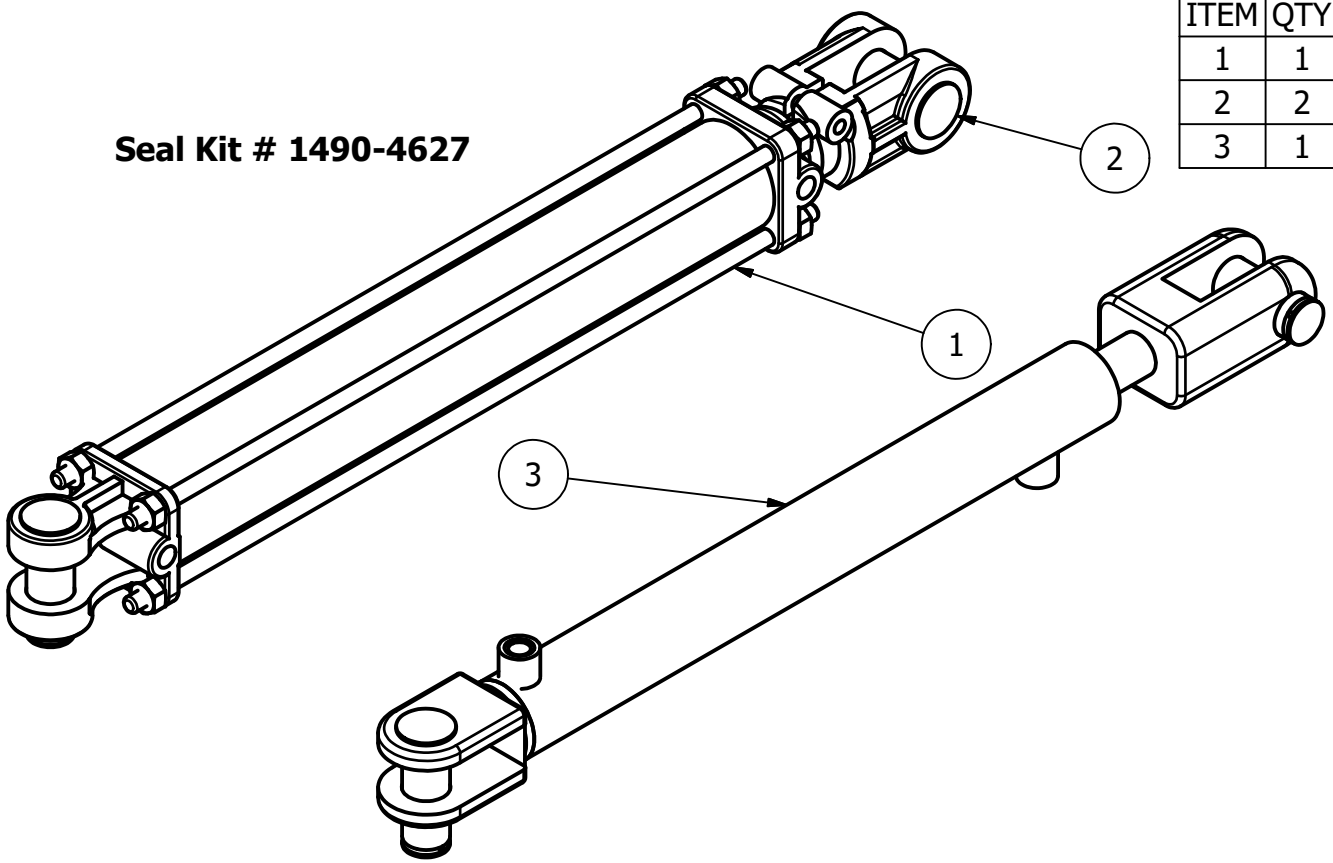

PARTS LIST			
ITEM	QTY	PART NUMBER	DESCRIPTION
1	1	1490-5031	Bale Stop 2 x 14 x 1-1/8
2	2	1490-4566	1 X 2-3/4 Cylinder Pin
3	1	1490-5908	Welded Bale Stop Cylinder

Stinger 6500 Stacker

Front Sub-Frame Detail

PARTS LIST			
ITEM	QTY	PART NUMBER	DESCRIPTION
1	1	5550AMF3	Front Mid-Engine Sub-Frame Assembly
2	1	1490-6321	Oval 6" LED Dome Compartment Light
3	1	1490-3502	Black Steel Oval Light Bracket
4	2	1490-2015	3/4x3-1/2x19 U-Bolts SQ Top
5	1	1490-6054	Tire Pressure J1939 Gateway
6	1	1490-6057	7" Antenna for Tire Pressure Gateway
7	2	1400-110	U-Bolt Plate
8	4	1490-2017	HiNuts for U-Bolts
9	2	1490-4985	Flexible Draw Latch, T-Handle
10	1	5550-324	Cage Bottom Screen
11	1	5550-318	Lower Front Cage Screen
12	1	5550-211	Bottom Radiator Seal Plate
13	2	5550-210	Side Radiator Seal Plate

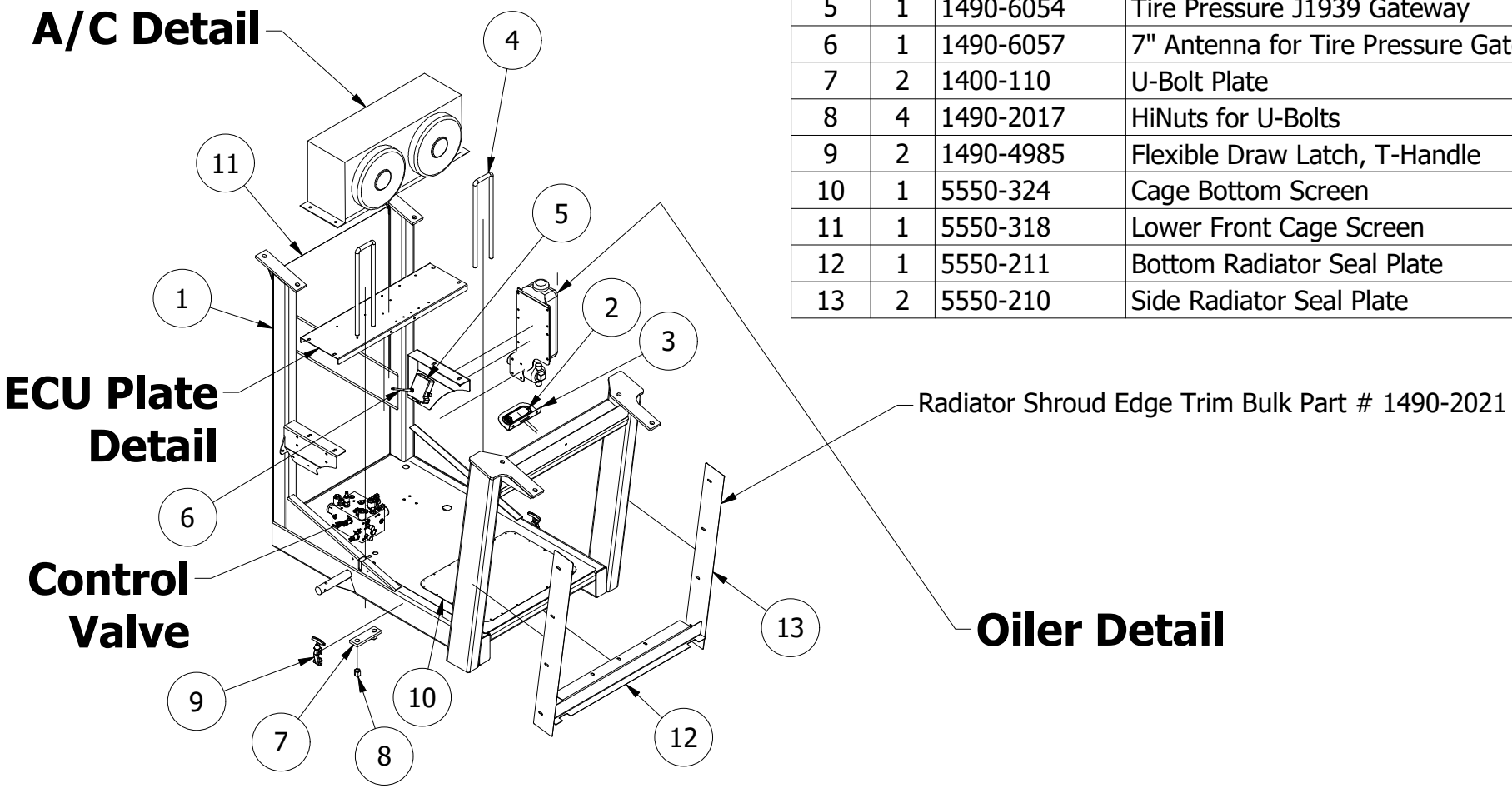

Oiler Detail

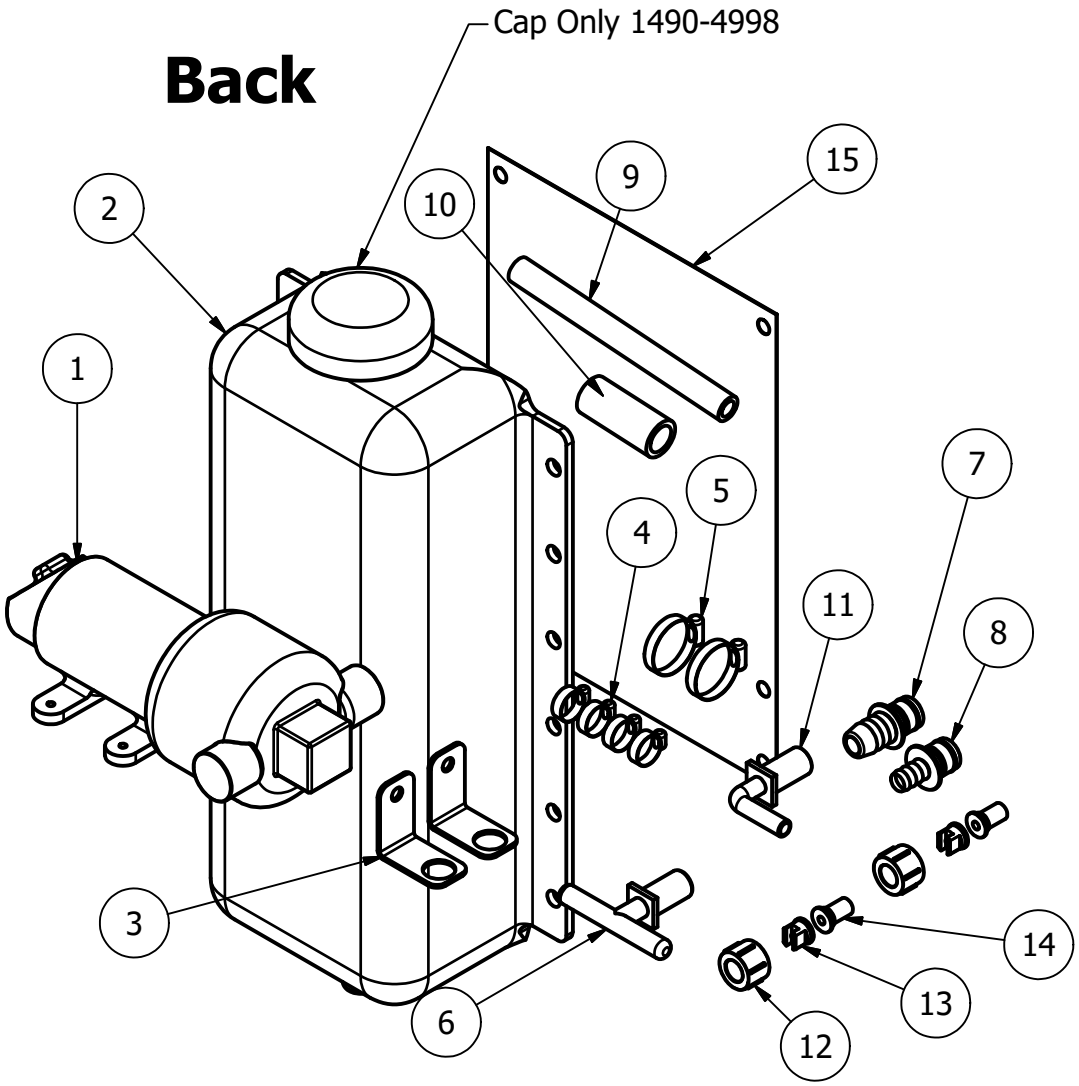

Home

PARTS LIST			
ITEM	QTY	PART NUMBER	DESCRIPTION
1	1	1490-5929	2.1 GPM Pump
2	1	1490-6598	Reservoir Six Qt. Tank
3	2	1490-5773	Spray Oiler Mount
4	4	1490-5161	Worm Gear Hose Clamp 7/16 - 11/16
5	2	1490-5444	Worm Gear Hose Clamp 9/16 - 1 1/4
6	1	1490-5475	11/16 UN x 3/8 Barb Tee
7	1	1490-5976	5/8" Hose Barb Port Fitting
8	1	1490-6267	3/8" Hose Barb Port Fitting
9	15'	1490-5176	3/8" x .594" Braided Tubing
10	2"	1490-4945	5/8' Black Heater Hose
11	1	1490-5476	11/16 UN x 3/8 Barb Elbow
12	2	1490-5477	11/16 UN Spray Nozzle Cap Nut
13	2	1490-5897	TeeJet Spray Tip
14	2	1490-5478	50 Mesh Screen w/check valve
15	1	1490-6614	Oiler Tank Support

Oiler System uses a light weight mineral oil
1490-5912 (5-gallon) & 1490-4629 (Bulk)
(Vegetable oils will gum up and eat the paint)

ECU PLate Detail

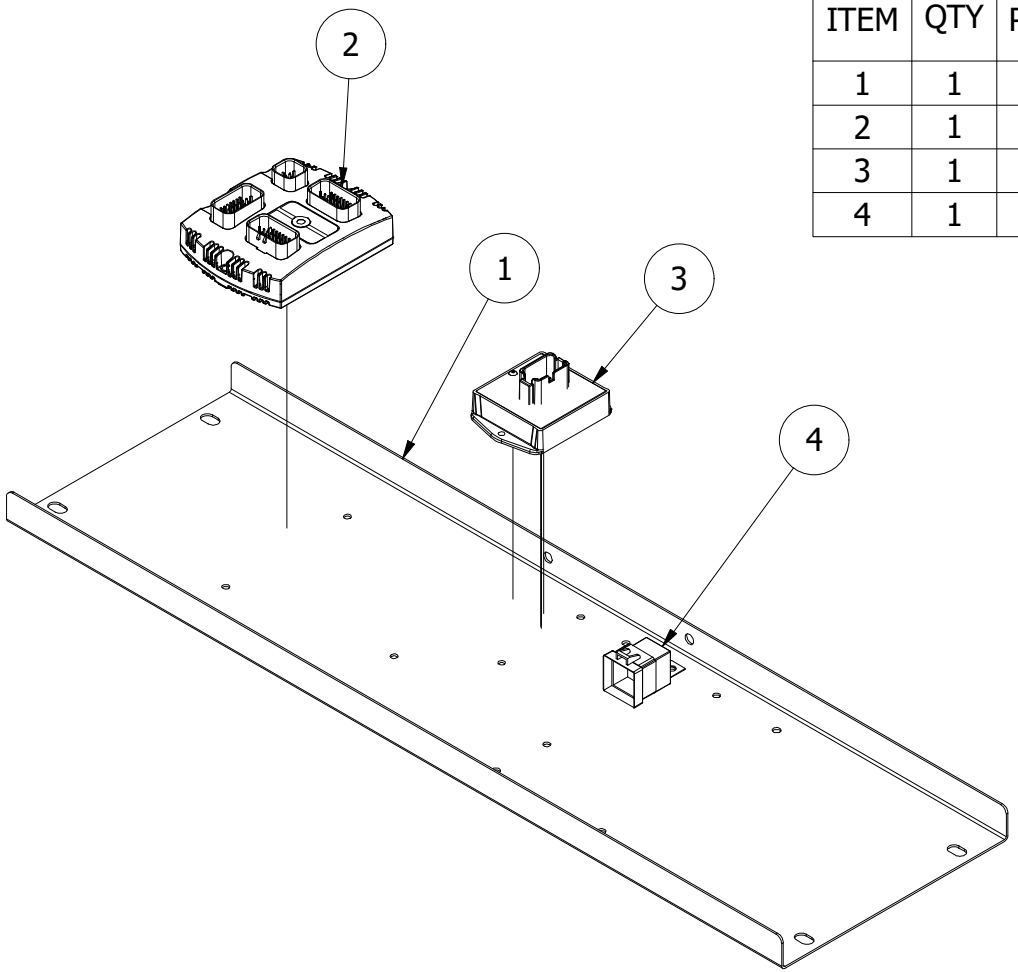

PARTS LIST			
ITEM	QTY	PART NUMBER	DESCRIPTION
1	1	5550-335	ECU Wiring Mout
2	1	1490-6083	Hydraforce 2415 ECU
3	1	1490-6980	1/4 Turn Relay Replacement Module
4	1	1490-5053	Water Tight Relay 12V (A/C)

A/C Detail

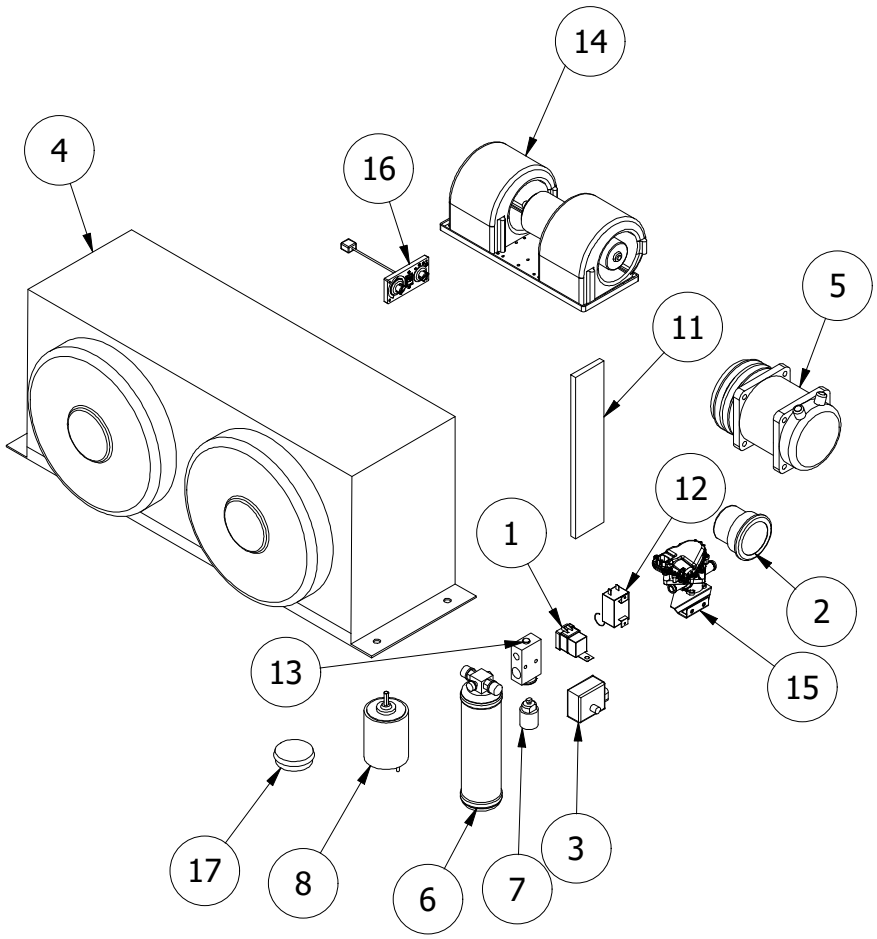

PARTS LIST		
ITEM	PART NUMBER	DESCRIPTION
1	1490-5053	Water Tight Relay 12V (A/C)
2	1490-6334	A/C louver vent for CCC cab (Front of Cab)
3	1490-6337	Air flow control motor for CCC cab
4	1490-7633	Dual fan Red Dot condenser Complete Assy
5	1490-4628	A/C Compressor (4509, 4510, 6664, 6668)
6	1490-7772	AC Drier,for RD fan Condenser
7	1490-4206	Binary Switch Male Threads
8	1490-7769	12 V Motor, For RD fan condenser
9	1490-7770	Fan Blade for fan motor
10	1490-5986	Rubber latch for Reddot A/C Condensor Door
11	1490-7737	A/C Recirc Filter for Badger
12	1490-6532	Thermostat Gen 3 and 4 and 5 Able Cab, Badger
13	1490-7735	TXV Expansion Valve, For Badger AC
14	1490-7738	A/C Blower, For Badger
15	1490-7763	Able New cab Water valve
16	1490-6531	A/C Control Panel 2018 Able Cabs
17	1490-8051	Small louver for Gen. 4 Cab (back wall)

Charge with approx. 4-1/4 lbs of R-134A

1/4 Turn Microswitch
Detail

Back **Home**

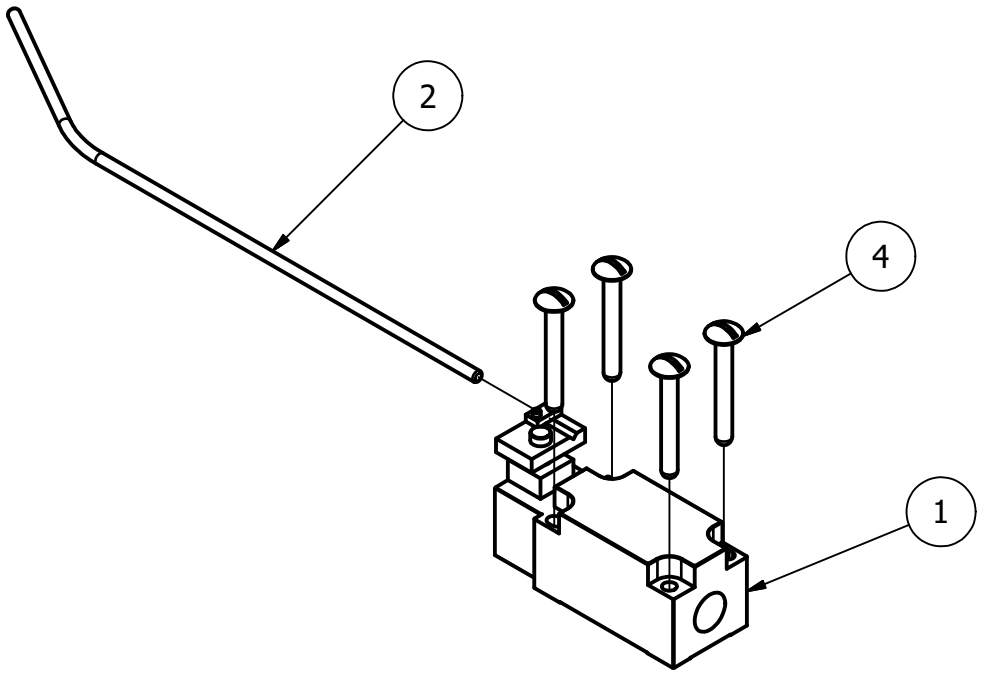

PARTS LIST			
ITEM	QTY	PART NUMBER	DESCRIPTION
1	1	1490-5894	Limit Switch w/rod mount
2	1	1490-6307	Rod for 1/4 Turn Limit Switch
4	4	1/4-20 X 2	Slotted Truss Head Machine Screw

Squeeze Rail Poly
Detail

Back **Home**

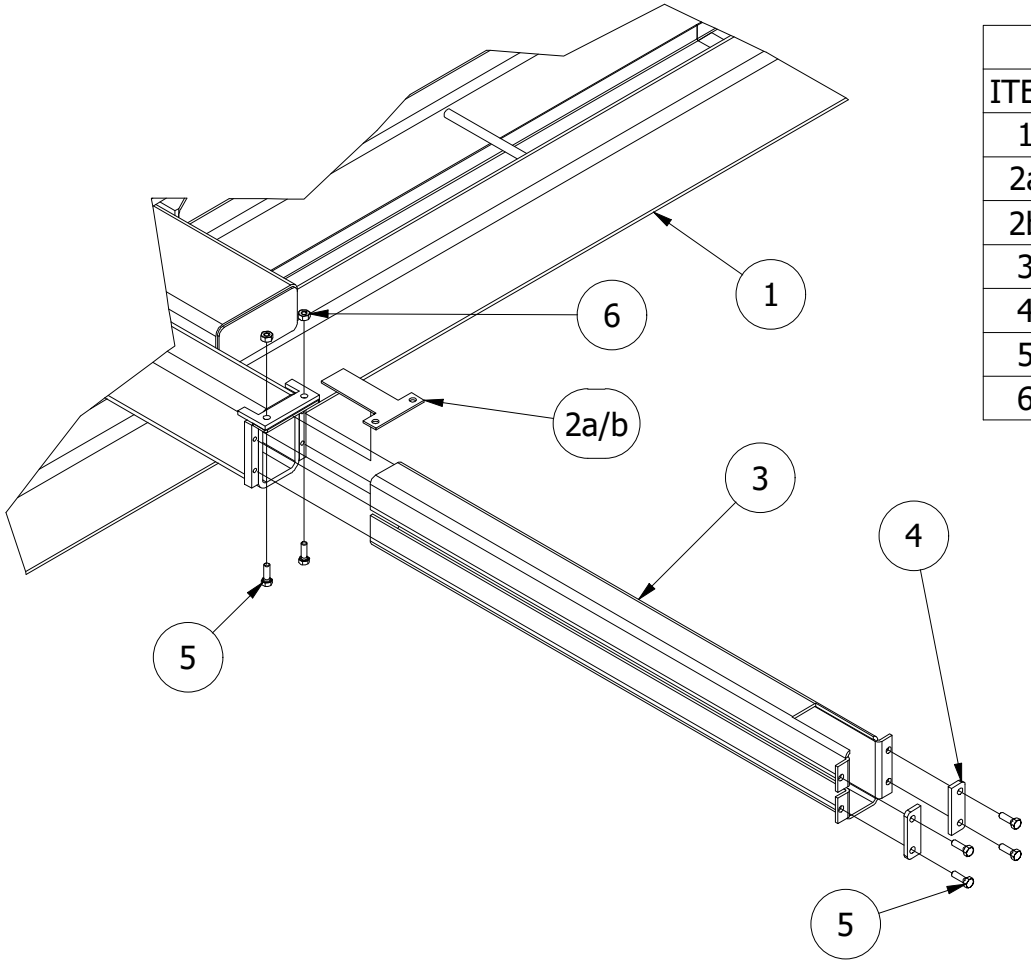

PARTS LIST			
ITEM	QTY	PART NUMBER	DESCRIPTION
1	1	6560A	500 Series Stacking Main Slide Assembly
2a	4	2460-328	Squeeze Wear Plate Steel
2b	4	2460-348	Squeeze Wear Plate Kit (Plastic)
3	4	2460-331	36" Squeeze Poly Liner
4	8	2460-320	Squeeze Poly Strap
5	24	5/16-18 X 1	Hex Bolt
6	8	5/16 - 18	Hex Nut

StackFrame Microswitch

1490-5764

Back **Home**

Head assy Only W/Spring Arm
1490-6080

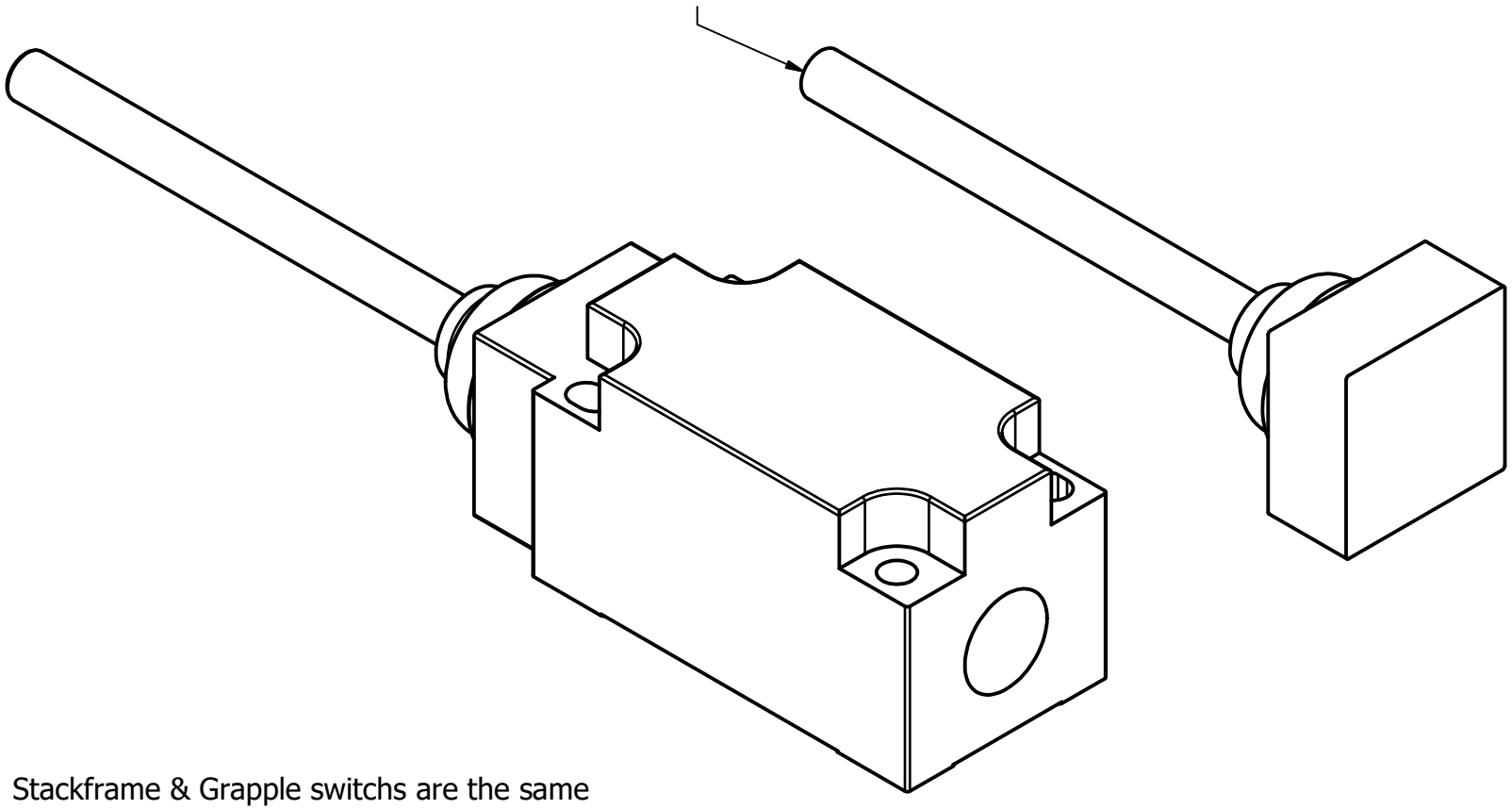

Stackframe & Grapple switchs are the same

Air Chamber Detail

Back **Home**

PARTS LIST			
ITEM	QTY	PART NUMBER	DESCRIPTION
1	1	2000A14	Front Air Cleaner Chamber Plate
2	1	2000-421	Air Cleaner Chamber Rear Plate
3	1	1490-4768	Model 6-350/1100 Precleaner
4	1	5565A	Hose Reel Assy (Complete W/Hose)
5	1	5560-110	Air Reel Support Strap

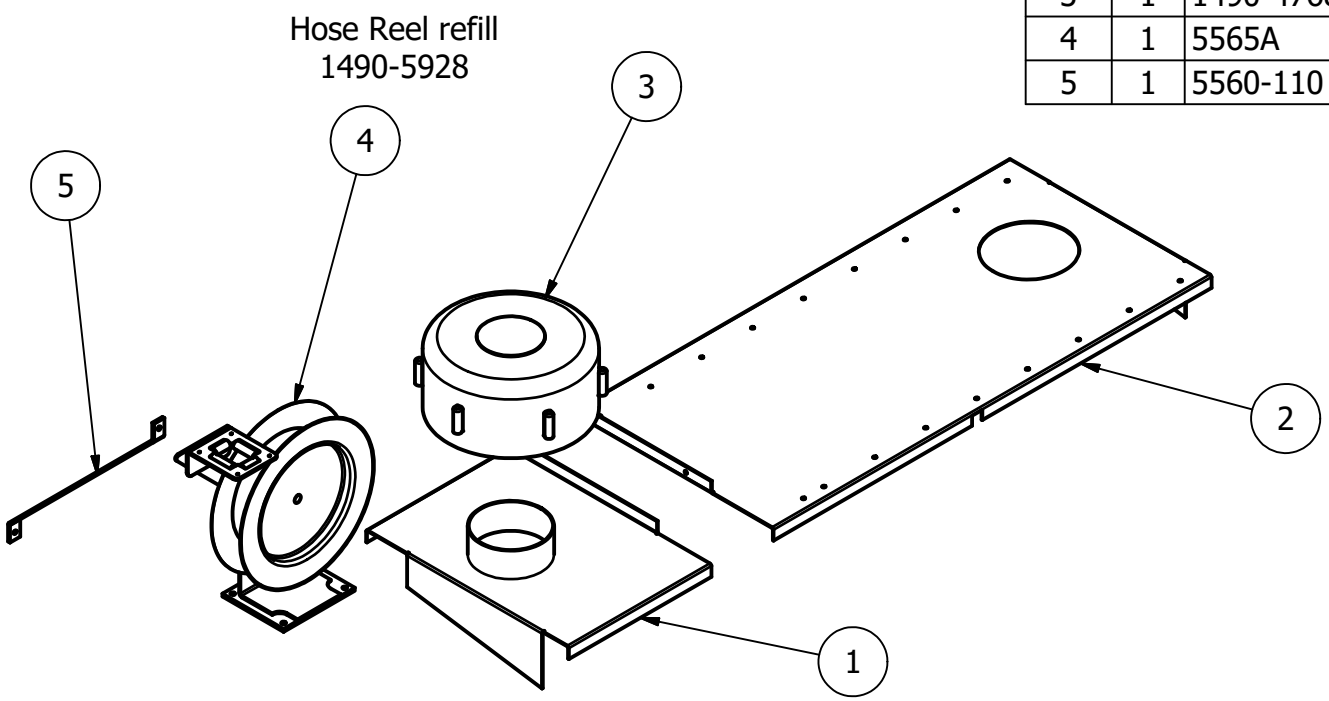

Squeeze Rail Detail

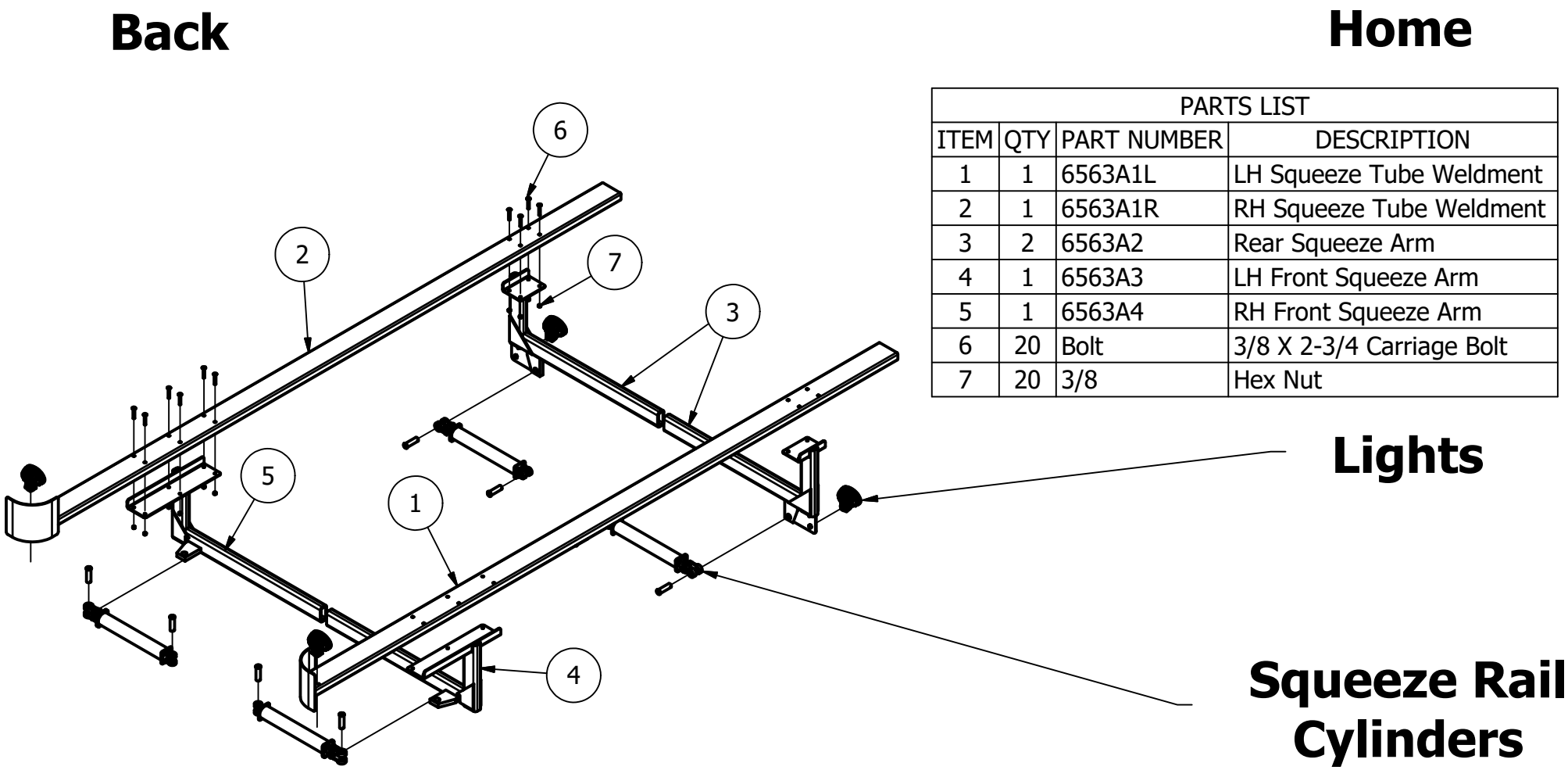

PARTS LIST			
ITEM	QTY	PART NUMBER	DESCRIPTION
1	1	6563A1L	LH Squeeze Tube Weldment
2	1	6563A1R	RH Squeeze Tube Weldment
3	2	6563A2	Rear Squeeze Arm
4	1	6563A3	LH Front Squeeze Arm
5	1	6563A4	RH Front Squeeze Arm
6	20	Bolt	3/8 X 2-3/4 Carriage Bolt
7	20	3/8	Hex Nut

Squeeze Rail Cylinders

Back **Home**

PARTS LIST			
ITEM	QTY	PART NUMBER	DESCRIPTION
1	2	1490-4454	Front Squeeze Cylinder 3-3/4 x 16 x 1-3/8
2	2	1490-4453	Rear Squeeze Cylinder 3-1/2 x 16 x 1-1/4
3	8	1490-1863	1 x 3-1/8 Cyl Pin

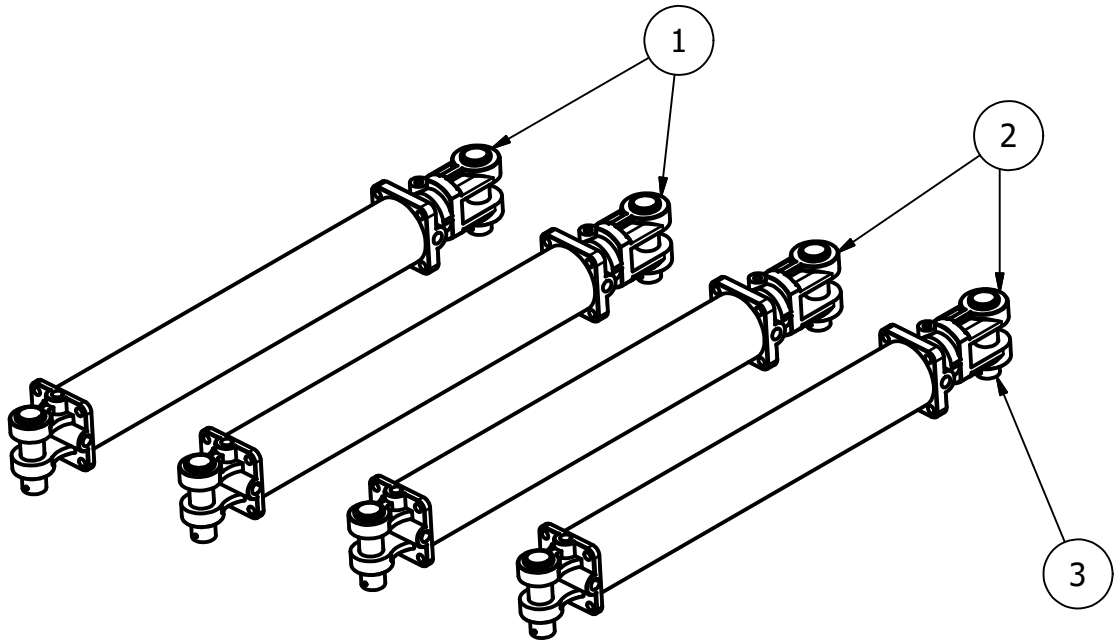

Rear Cylinder Seal Kit
Part # 1490-5025

Front Cylinder Seal Kit
Part # 1490-5026

Rear Axle Components

Back

Home

Complete Assy

Drive Axle

Hub & Brakes

Wheel Studs & Nuts

Seals & Bearings

Drive Shaft

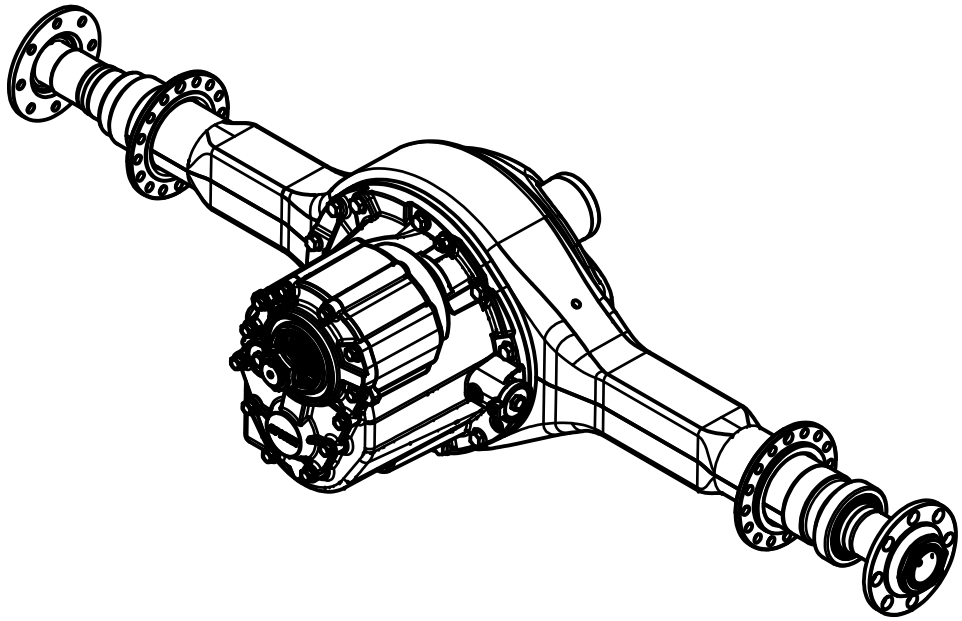

Rear Axle Assemblies

Back

Home

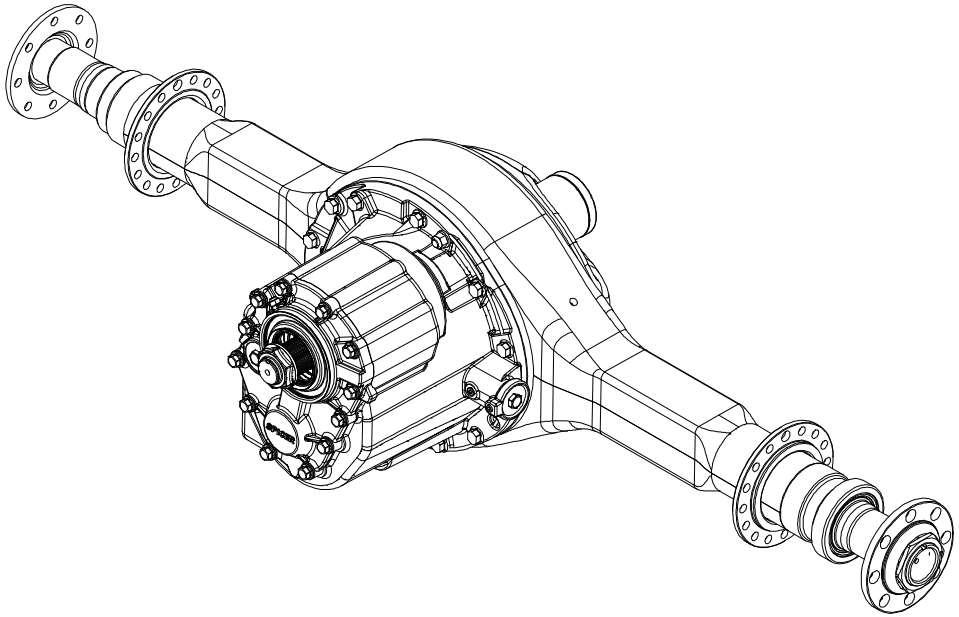

6500 2-speed Units
Complete Axle Assy ST521
Part #1490-7884

(No Hub or Drum)

Loaded Head Assy
Part #1490-7883

Rear Axle
Seals & Bearings

Back

Home

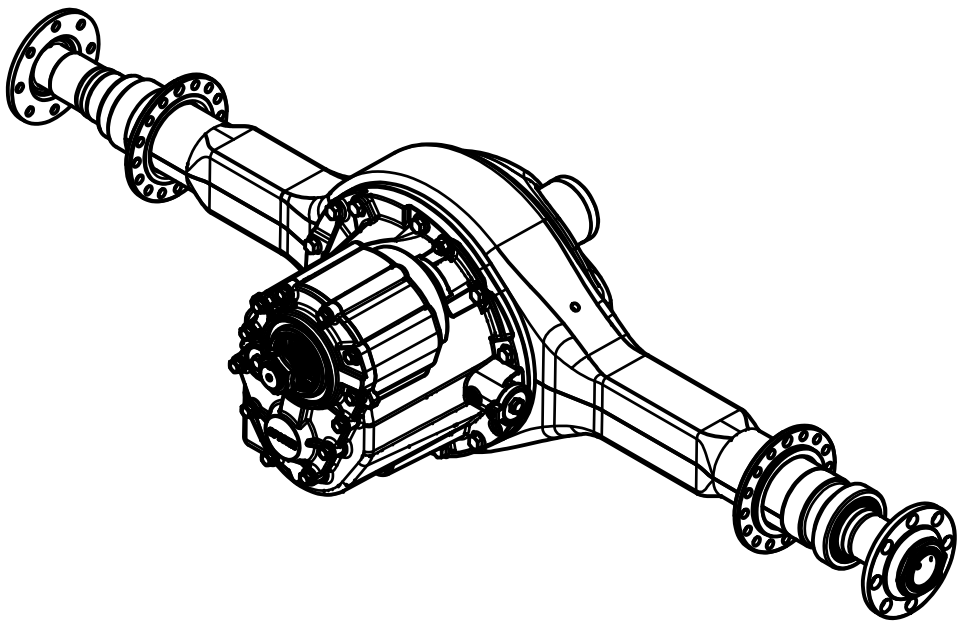

Inner Rear Axle Bearing
Part #1490-6018

Outer Rear Axle Bearing
Part #1490-6019

Rear Wheel Seal
Part #1490-5165

Rear Wheel Wear Sleeve
Part #1490-5503

Wheel Stud & Nut Detail
Hub Pilot Wheels

S/N 791, 795 & Newer

Back

Home

PARTS LIST			
ITEM	QTY	PART NUMBER	DESCRIPTION
1	10	1490-5803	Euclid Stud Front Hub Pilot M22x1.5
2	10	1490-5794	Euclid Nut Front & Rear Hub Pilot Wheels M22x1.5

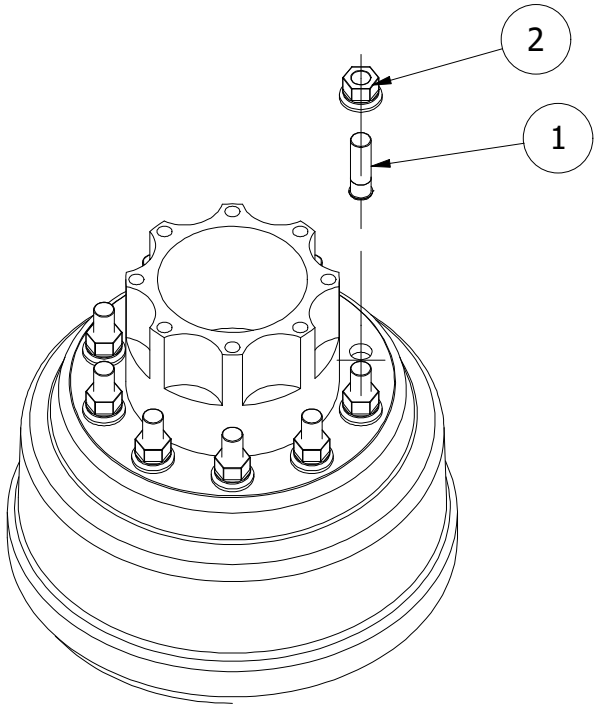

Rear Brake Parts

Rear Axle Plate Detail

Rear Axle Plate Detail

Back

Home

Axle Flange Gasket
Part #1490-5821

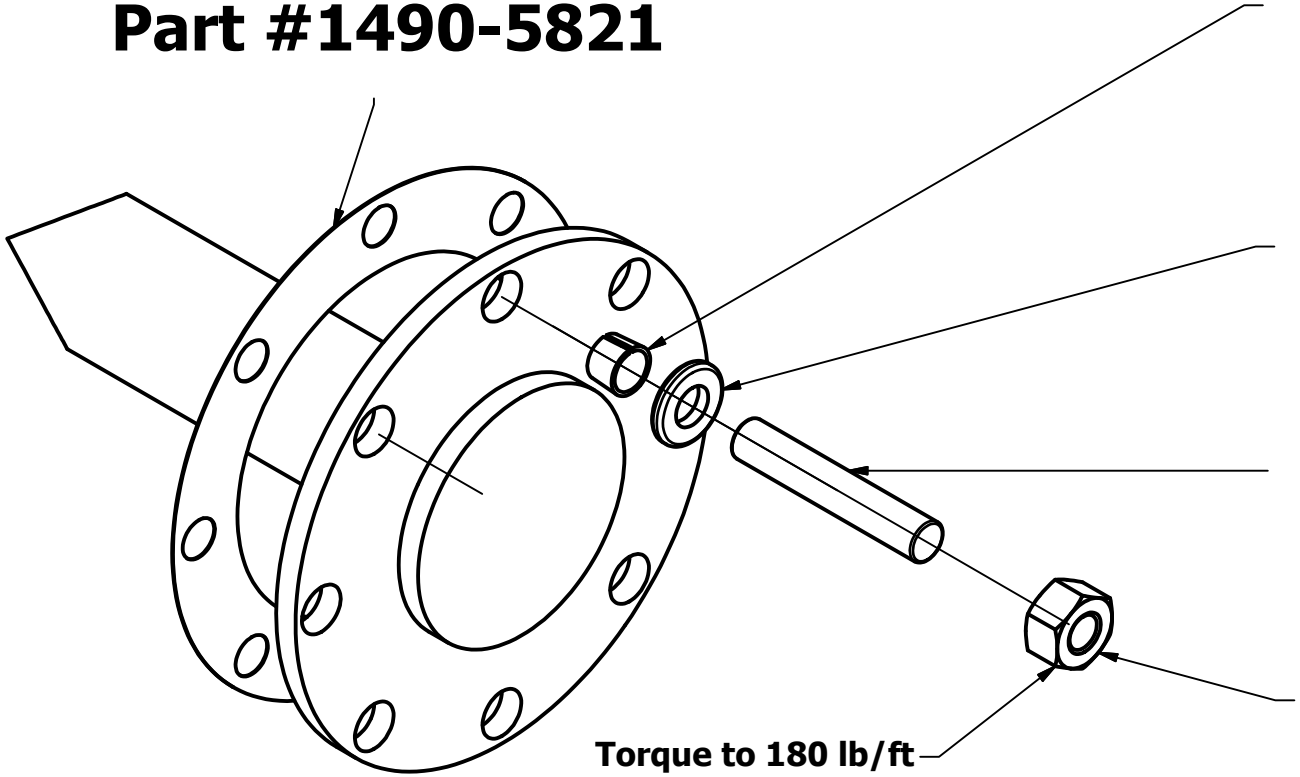

Axle Shaft Cone
Part #1490-5605

Axle Shaft Washer
Part #1490-5606

Axle Drive Stud
Part #1490-5027

Axle Shaft Nut
Part #1490-5607

Rear Axle Shaft

Back **Home**

Rear Axle Long
1490-5673
S/N 393-790, 792-794
1490-7000
S/N 791, 795 & Later

Rear Axle Short
1490-5674
S/N 393-790, 792-794
1490-7001
S/N 791, 795 & Later

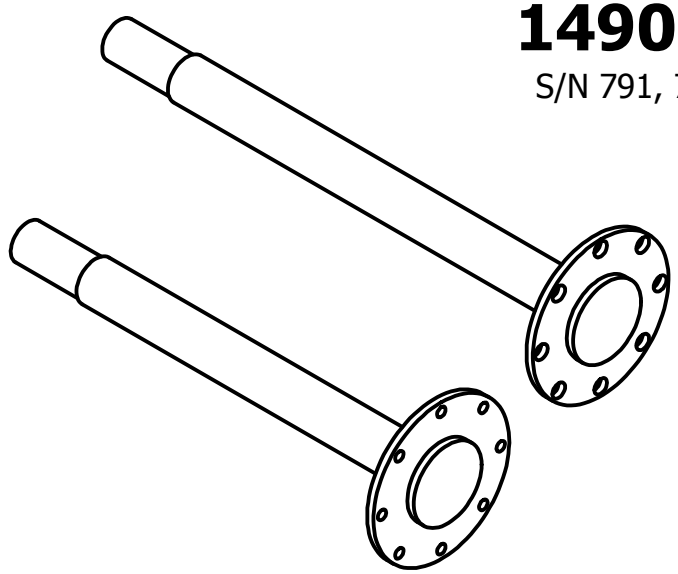

Rear Axle
Plate Detail

Brake Pad Sets

(come with mounting Hardware Kit)

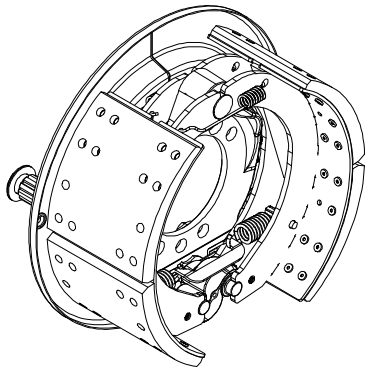

Front Axle
Eaton Lined Shoe Set
Part#1490-4906

(1 set per wheel)

Rear Axle
Eaton Lined Shoe Set
Part# 1490-7650

(1 set per wheel)

Rear Axle Brake Parts

Hub & Drum Assemblies Come with Wheel & Axle Plate Studs
(No Nuts, Cones, Washers, or Gasket)

Back

Home

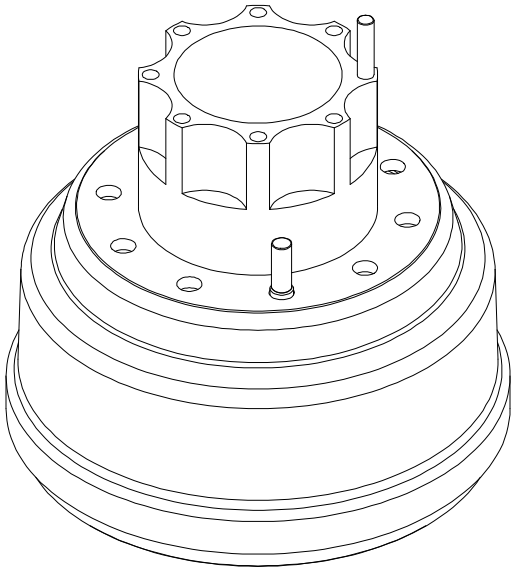

RH Hub & Drum Assy
Part #1490-5835

LH Hub & Drum Assy
Part #1490-5836

Eaton Lined Shoe Set
Part #1490-7070

(1 Per Wheel)

Drive Shaft Parts

Back Home

Complete PTS Driveshaft Assy W/U-Joints and "K" Fuses Part #1490-5718

U-Joint Only Part # 1490-2454

"K" Fuse Set Part # 1490-5749

Front Axle Components

Back

Home

Brakes

Wheel Studs

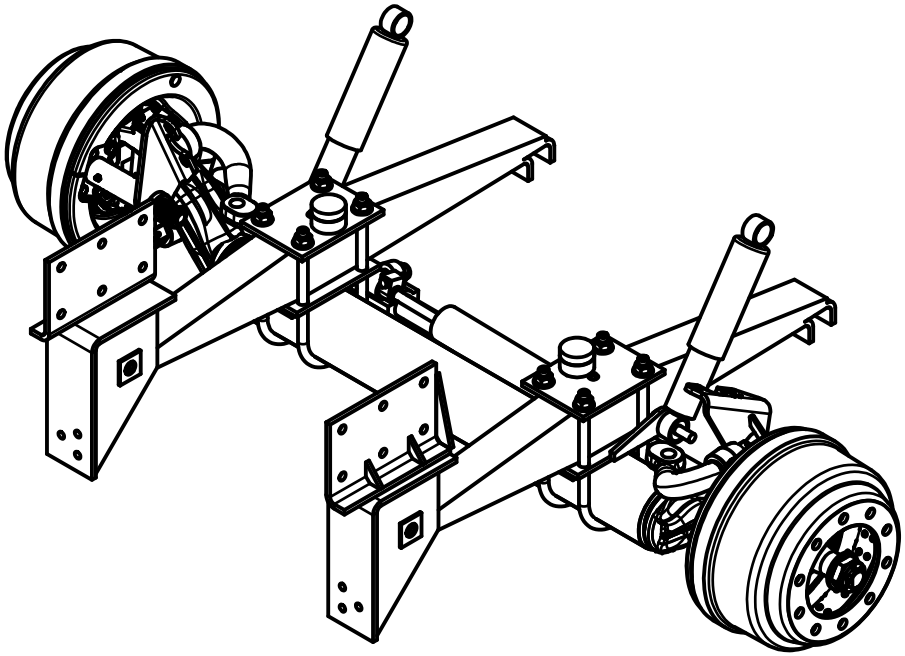

Steering

Shocks & Bumper

Springs & Hangers

Other

12 Leaf Front Spring Stack
1490-4989

U-bolt 1490-7098, Washer & Nut 1490-6022, 1490-5405
Spring Bolt & Nut 1490-5003, 1490-5004

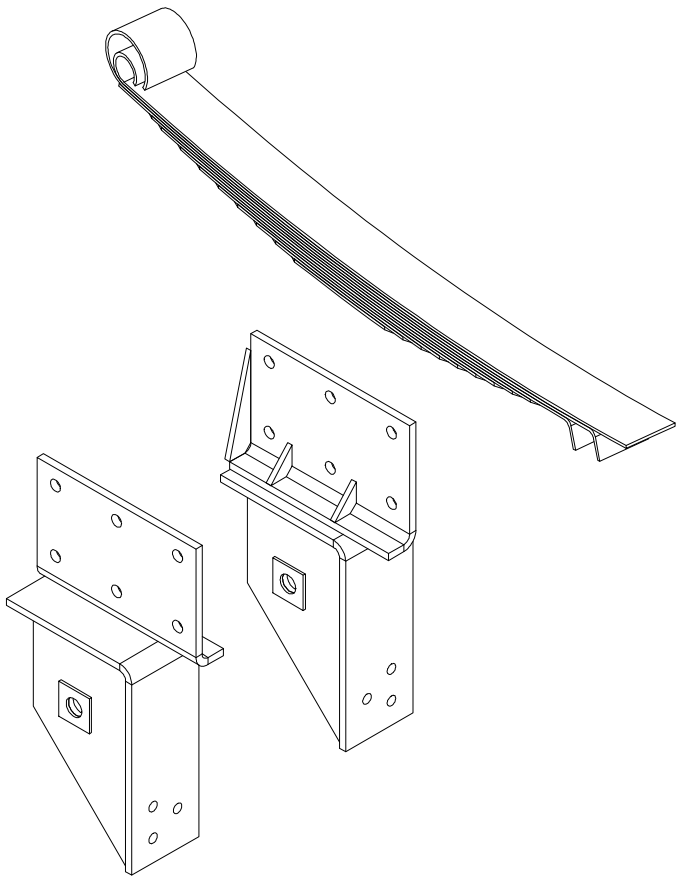

LH Front Spring Hanger
Part # 1490-4729

RH Front Spring Hanger
Part # 1490-4728

LH Rear Spring Hanger
Part # 1490-4730

RH Rear Spring Hanger
Part # 1490-4731

Bushing &
Poly Parts

Front Axle Wheel
Studs & Nuts
Hub Pilot Wheels

Back

Home

Euclid Stud Front Hub Pilot M22x1.5
Part # 1490-5803

Euclid Nut Front Hub Pilot M22x1.5
Part # 1490-5794

Leaf Springs & Hangers

12 Leaf Front Spring Stack 1490-6579

(2014 and Newer 11,250 lb stack)

U-bolt 1490-7098, Washer & Nut 1490-6022, 1490-5405
Spring Bolt & Nut 1490-5003, 1490-5004

LH Front Spring Hanger Part # 1490-4729

RH Front Spring Hanger Part # 1490-4728

LH Rear Spring Hanger Part # 1490-4730

RH Rear Spring Hanger Part # 1490-4731

11 Leaf Rear Spring Stack 1490-5340

U-bolt 1490-4709
Washer & Nut 1490-6022, 1490-5405

LH Rear Spring Hanger Part # 1490-5339

RH Rear Spring Hanger Part # 1490-5403

Poly Wear Pads

Leaf Spring
Bushing & Poly Sets

Back

Home

Front Poly Wear Pad Kit
Part # 1490-4575
(one Side Olny)

Rear Poly Wear Pad Kit
Part # 1490-4053
(one Side Olny)

Poly Slipper Steel Plate
Part # 1490-4576
(one Side Olny)

Front Leaf Spring Bushing
Part # 1490-4428
(one Side Olny)

Springs & Hangers

Front Axle Brake Parts

Back

Home

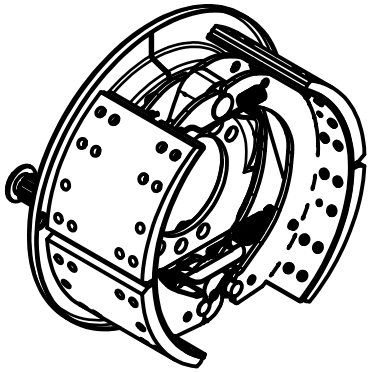

Eaton Lined Shoe Set
Part #1490-4906

Steering Components

Back **Home**

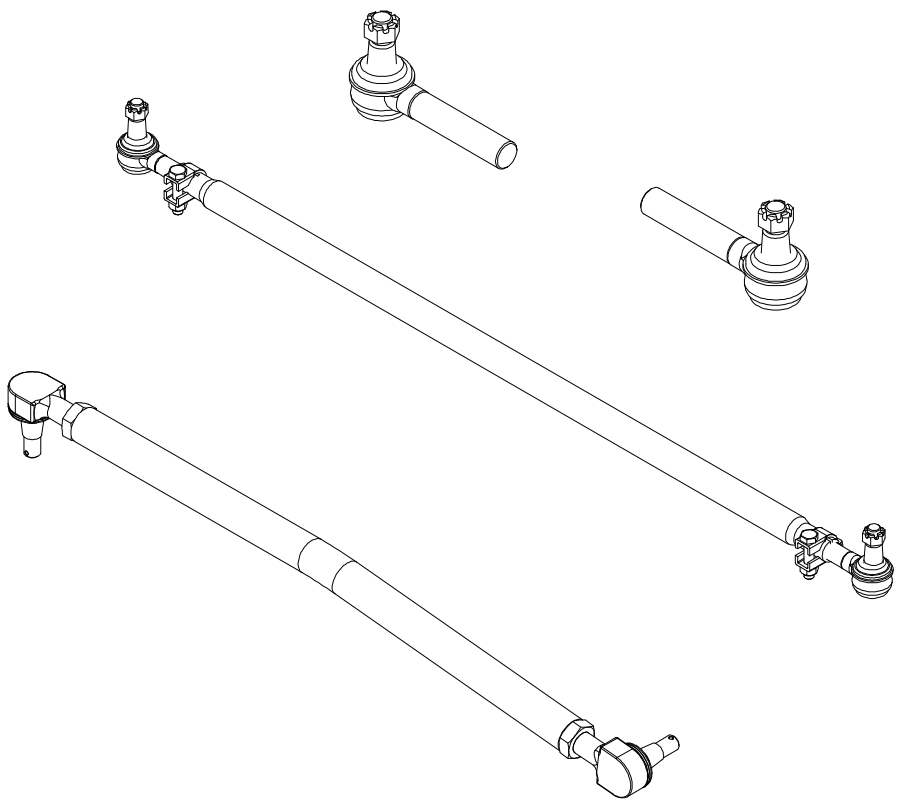

Complete Tie Rod Assy
Part #1490-6764
S/N 609, 658-Later

LH Tie Rod End
Part #1490-4661

RH Tie Rod End
Part #1490-4662

Complete Drag Link Assy
Part #1490-6794

Drag Link End
Part #1490-4410

Front Axle Shock
Part # 1490-5181

(No Spacers or Bolt)

Back **Home**

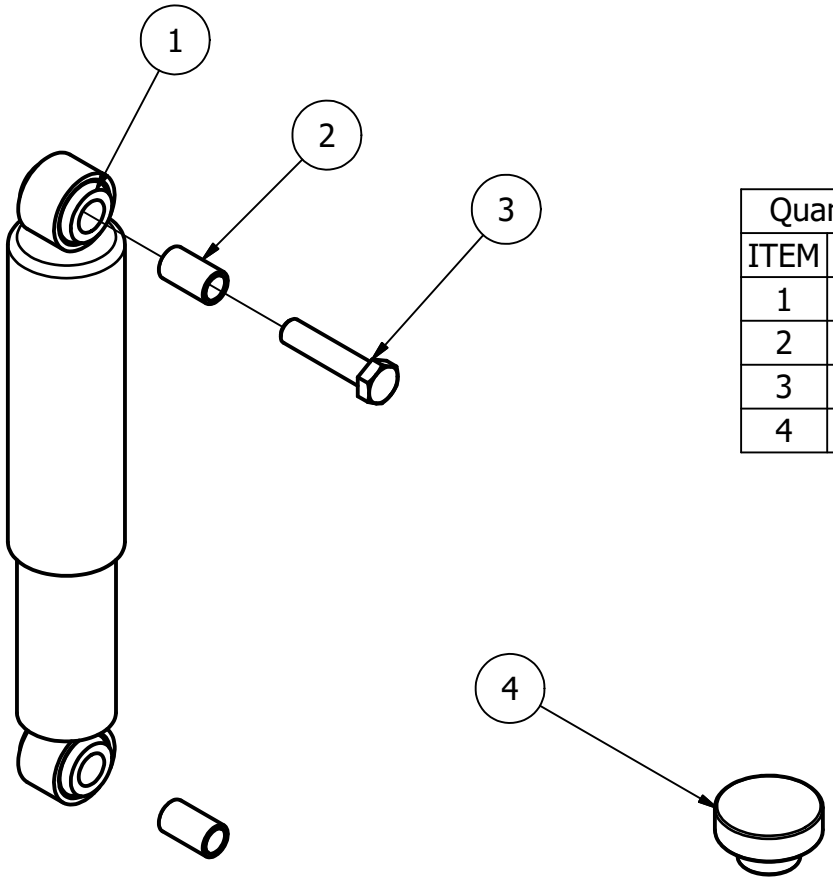

Quantity per side		PARTS LIST	
ITEM	QTY	PART NUMBER	DESCRIPTION
1	1	1490-5181	Monroe Front Shock
2	2	1490-5301	Front Shock Spacer Sleeve
3	1	1490-6597	3/4-10 UNC - 3.50 Gd 8
4	1	1490-4068	Front Axle Bumper

Monroe Magnum 70 Part# 74025

Class 7-8 Truck & Bus Shock

15-¾" collapsed 24-¾" Extended

35-16 Rubber Bushings for the Old CCC Shock **1490-6232** = Qty 4 per shock

Front Axle Misc Parts

Back

Home

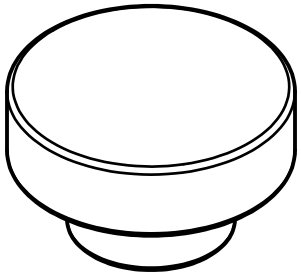

Axle Bumper
Part # 1490-4068

Tire & Wheels

Back

Home

Front
Tires & Wheels

Rear
Tires & Wheels

Tire Pressure
Monitoring System

Front Wheel
Studs & Nuts

Rear Wheel
Studs & Nuts
S/N 791, 795 & Newer

Rear Tire & Wheel

Back **Home**

Steel Wheel
White Powdercoated
Part# 1490-7684
22.5x24 with 5/8" 10 hole
Hp plate 12 1/2" Backset (Hub Pilot)

BKT Tire
Part #1490-7676
750/45R - 22.5

Tire & Wheel Combo
Part# 1490-7665

Steel Wheel
Chromazone Powdercoated
Part# 1490-7759
22.5x24 with 5/8" 10 hole
HP Plate 12 1/2 BS-G (Hub Pilot)

BKT Tire
Part #1490-7676
750/45R - 22.5

Front Tire & Wheel

Back **Home**

Steel Wheel
White Powdercoated
Part# 1490-7683
22.5x16 with 5/8" 10 hole
Hp plate 12.25 Backset (Hub Pilot)

BKT Tire
Part #1490-7678
500/60 - 22.5

Tire & Wheel Combo
Part #1490-7666

Steel Wheel
Chromazone Powdercoated
Part# 1490-6578
22.5x16 10 Hole 7MM 12.75 (Hub Pilot)

BKT Tire
Part #1490-7678
500/60 - 22.5

Tire Pressure Monitoring System

Back

Home

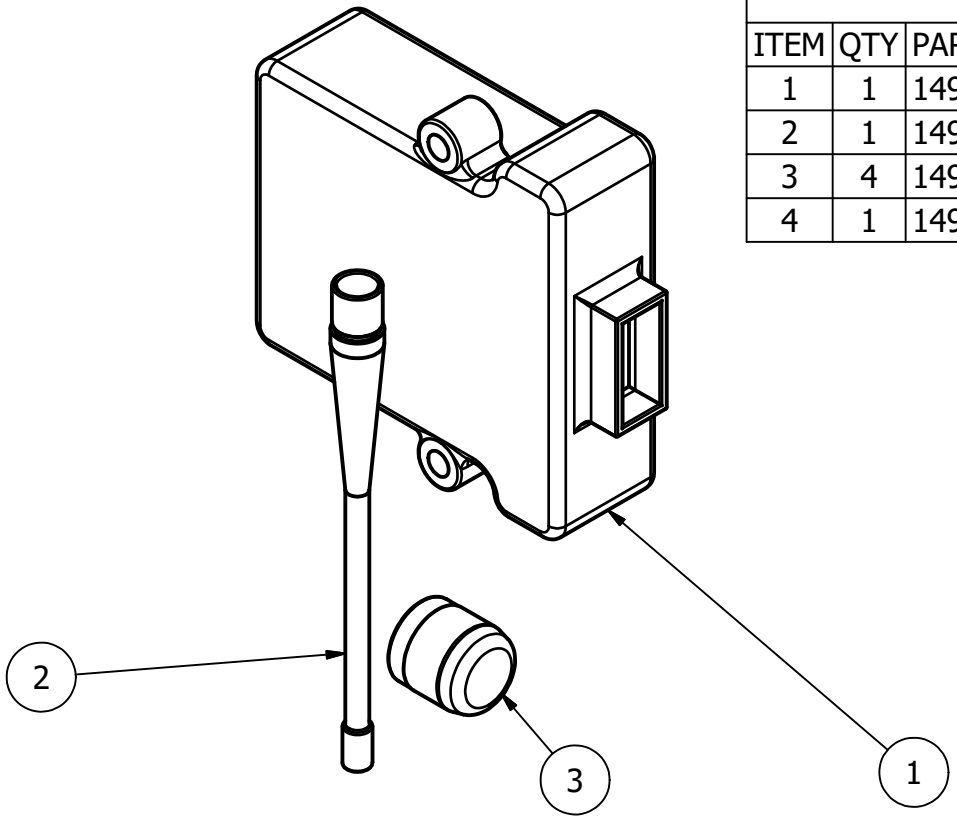

PARTS LIST			
ITEM	QTY	PART NUMBER	DESCRIPTION
1	1	1490-6054	Tire Pressure J1939 Gateway
2	1	1490-6057	7" Antenna for Tire Pressure Gateway
3	4	1490-5780	Tire Pressure Sensor 2.0
4	1	1490-6055	Gateway Connector Cord

Earlier Systems

Pressure Pro Monitor....1490-5777
3.5" Antenna.....1490-5778
RS-32 Power Cord.....1490-5779

Glass & Seals
Gen 4 Able Cab

Unit #798-Later

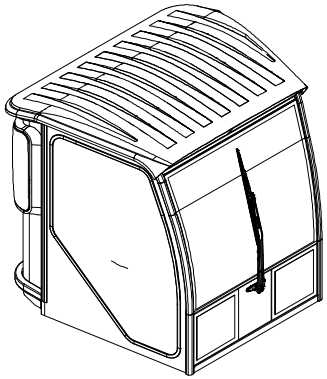

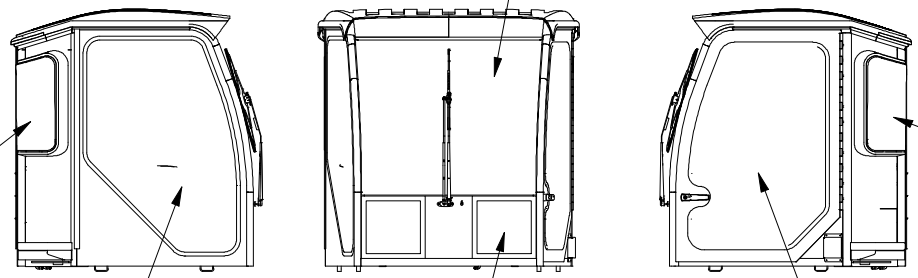

1490-6535 Windshield for Able Cab
Unit #798-Later
Manufacturer Part # 173-5100

1490-7020 RH Rear Corner Glass
Manufacturer Part # 173-5106
1490-7866 Kit Glass, Bolt in seal

1490-7019 LH Rear Corner Glass
Manufacturer Part # 173-5105
1490-7866 Kit Glass, Bolt in seal

1490-7012- Side Glass RH
Manufacturer Part # 173-5102
14907724 Rubber Window Trim
Manufacturer Part # 284A-0051

1490-7503 Door Glass Gen 4 Able Cab
Manufacturer Part # 173-5101 R1
1490-7724 Rubber Window Trim
Manufacturer Part # 284A-0051

1490-6536 Lower Front Glass Both Sides
Manufacturer Part # 173-5104

Headlight & Housing

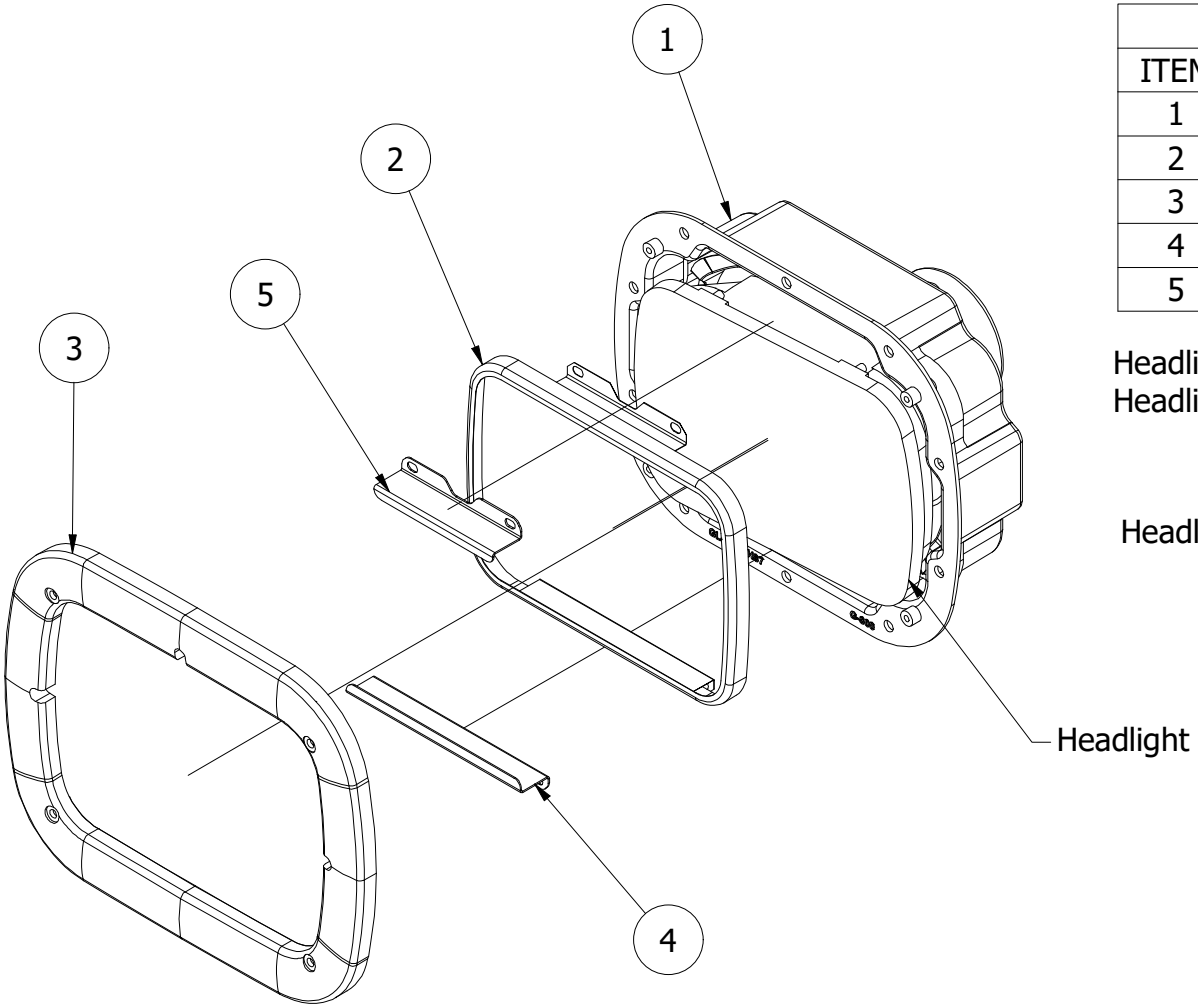

PARTS LIST			
ITEM	QTY	PART NUMBER	DESCRIPTION
1	1	1490-5618	Headlight Housing
2	1	1490-7419	Headlight Retaining Ring
3	1	1490-5427	Chrome Ring Bezel
4	1	8570-532	Headlight Saver Tab Lg
5	1	8570-533	Headlight Saver Tab Sm

Headlight LED 5X7 Real Lux for new Trucks.....1490-7429
Headlight Hallogen Bulb For old Trucks.....1490-5931

Headlight Plate.....1490-6886

Stinger 6500 Stacker

Unit Control
Monitor Assembly

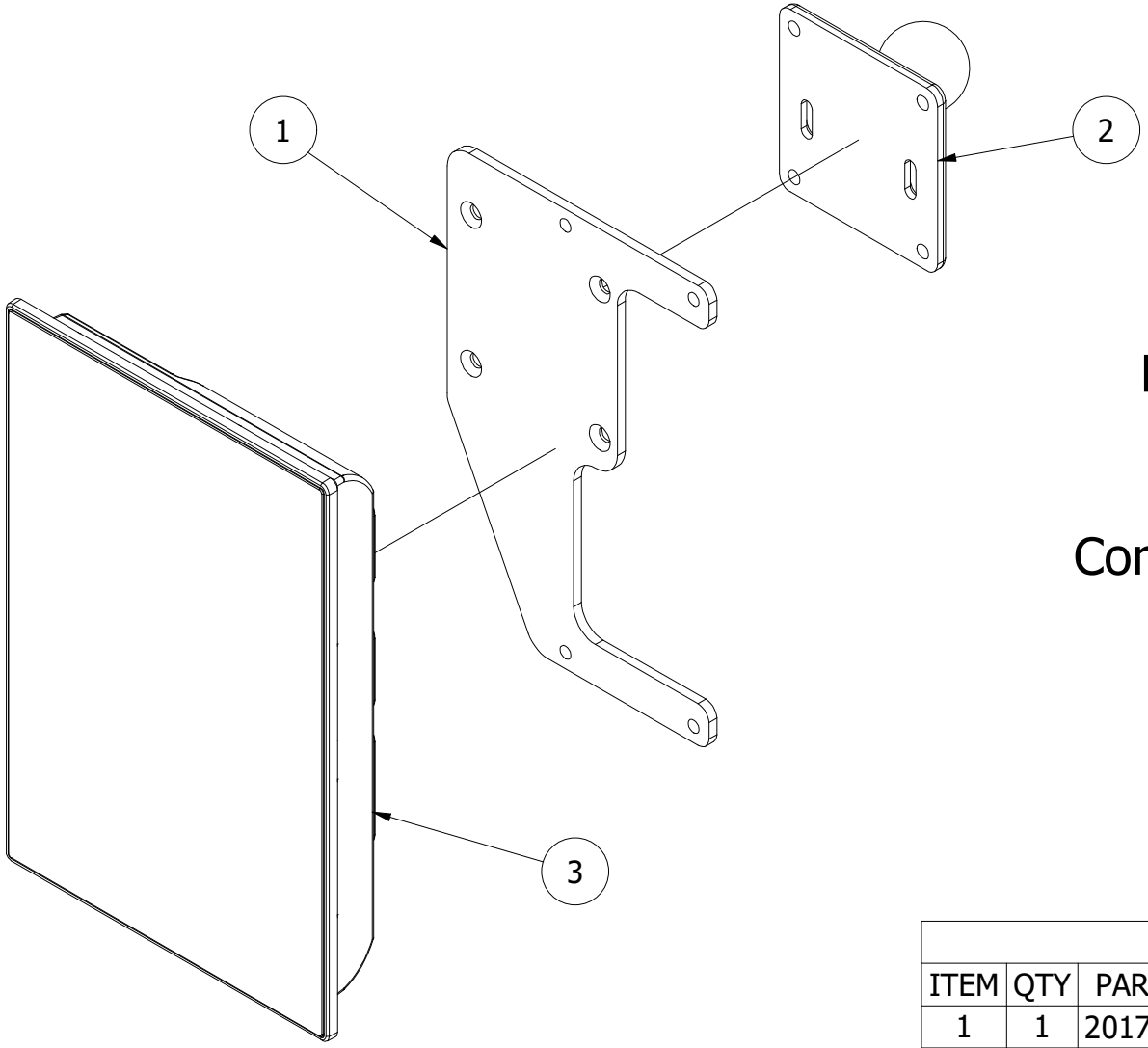

Ram Ratchet Swing Arm
Part # 1490-6996

Control Monitor Mounting Arm
Part # 2017A22

PARTS LIST			
ITEM	QTY	PART NUMBER	DESCRIPTION
1	1	2017-109	display mount plate
2	1	1490-6402	Versa Base Mount W/1.5" Ball
3	1	1490-7803	PV1100-T Portrait Touch Display

Stinger 6500 Stacker

Detail A, Assy

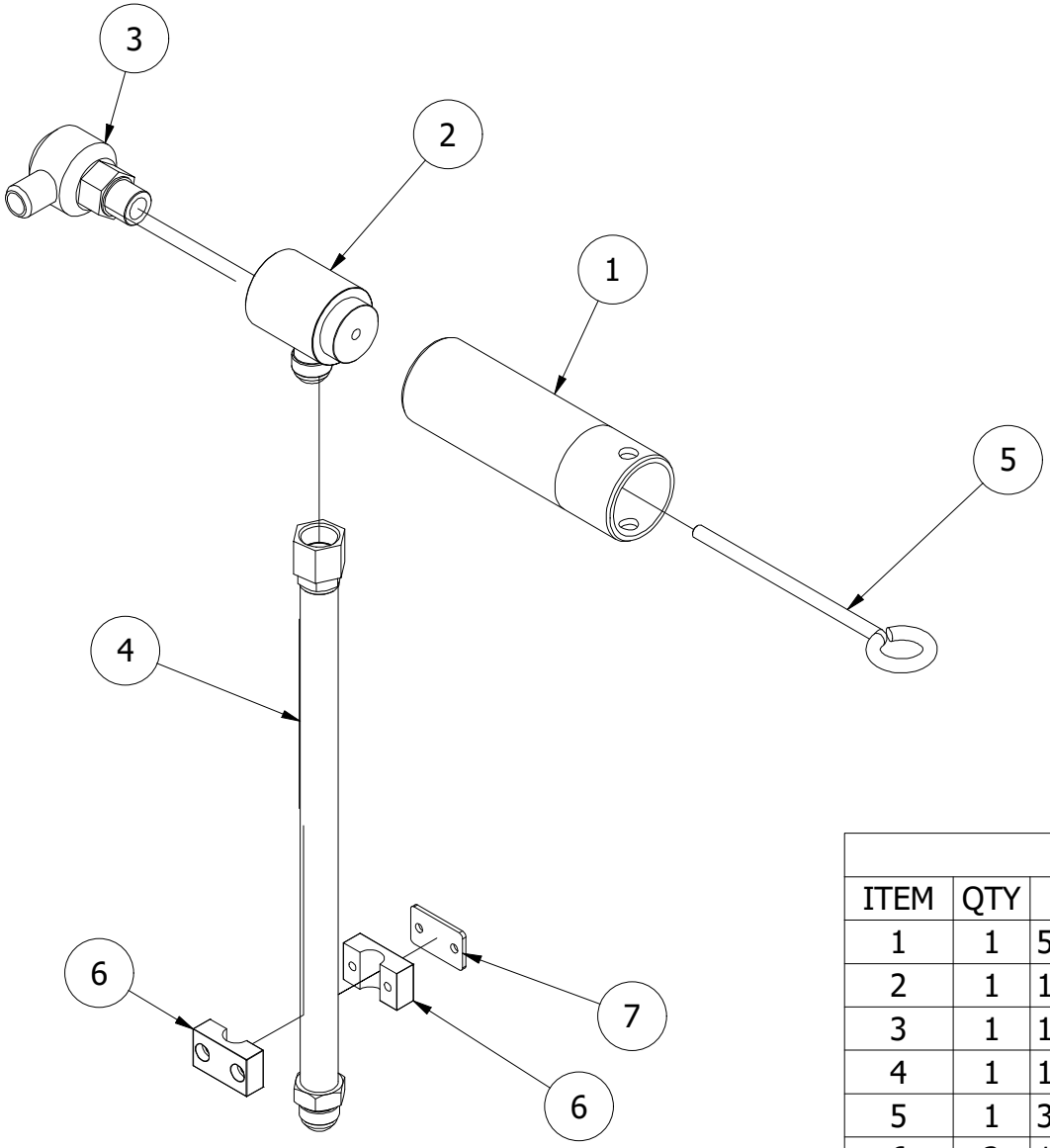

PARTS LIST			
ITEM	QTY	PART NUMBER	DESCRIPTION
1	1	5540-111	Main Pivot Shaft
2	1	1490-5879	Main Pivot Hose Swivel Mount Block
3	1	1490-5849	3/4' Hydraulic High Pressure Swivel
4	1	1400-202	Front Swivel Steel Line
5	1	3_8 X 8 Eye bolt	Long Shank Eye Bolt
6	2	14905609	1/2 Smoothie Single Clamp Insert
7	1	14904909	1/2 & 5/8 Single Cover

Step & Toolbox Detail

PARTS LIST				
ITEM	QTY	PART NUMBER	DESCRIPTION	
1	1	2017A15	Step & Tool Box Assy	
2	1	2017A16	Entry Step Weldment	
3	1	2017-113	Tool Box Fender Mounting Bracket	Required 2017 to 23
4	1	2017A18	Step Fender Mounting Bracket	Required 2017 to 23
5	1	1490-2442	B-1 Bumper	
6	2	1490-4764	Small Hinge W/Zerk	
7	1	2000-405	Toolbox Door	

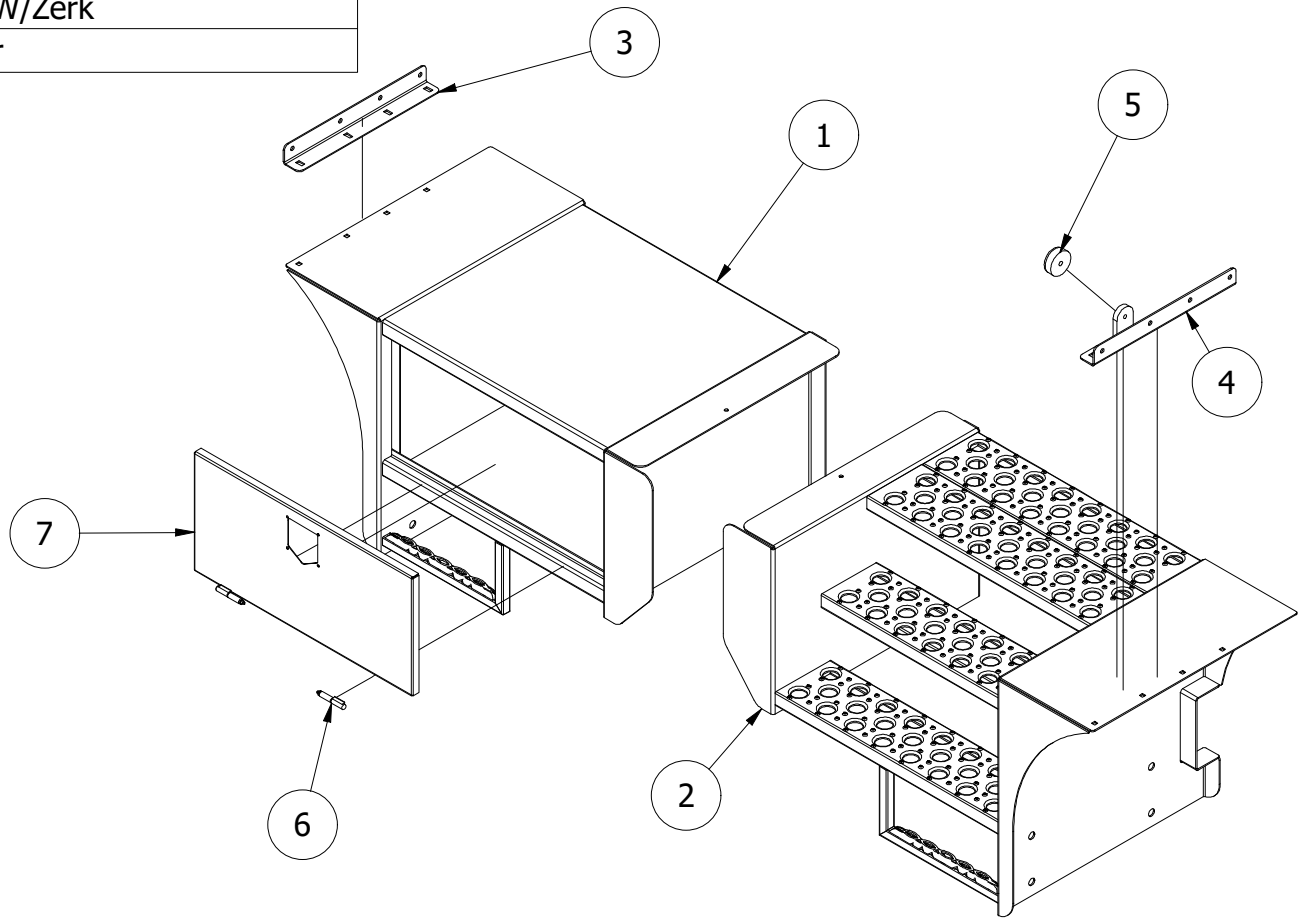
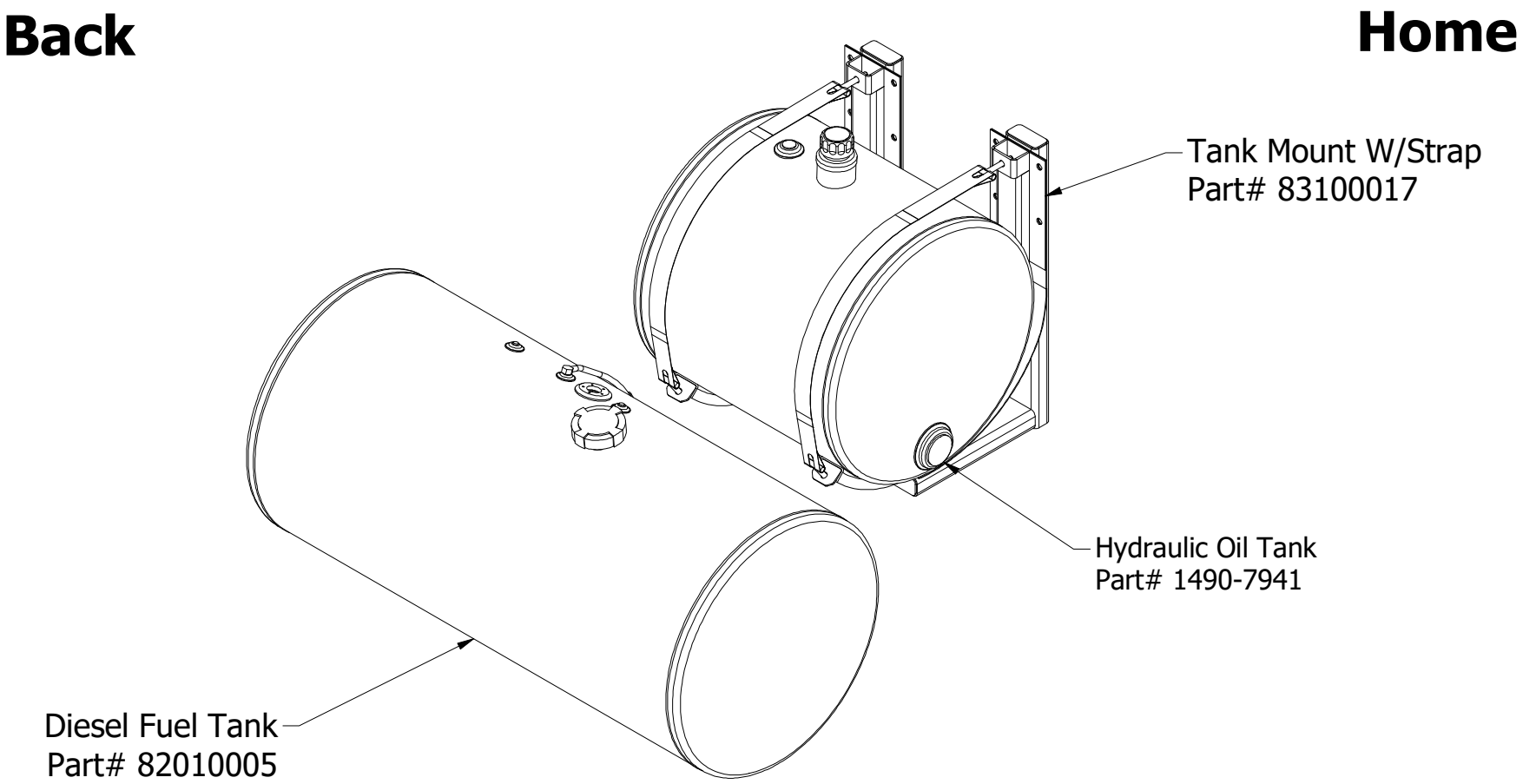
Tanks & Tank Mounts